RISHI DHOLA

AYURVEDIC HOSPITAL AND COLLEGE

Shahdol, Madhya Pradesh, India

Dec, 2025

AYURVEDIC HOSPITAL AND COLLEGE

Shahdol, Madhya Pradesh, India

BACHELOR OF ARCHITECTURE

BY

RITESH SONAWANE

211110042



DEPARTMENT OF ARCHITECTURE AND PLANNING

MAULANA AZAD NATIONAL INSTITUTE OF TECHNOLOGY, BHOPAL

DEC 2025

ARC 511 – Thesis Project

Ayurvedic Hospital and College

Shahdol, Madhya Pradesh, India

Submitted by:

RITESH SONAWANE

211110042

B. ARCH

9th Semester, 5th Year

UNDER THE GUIDANCE OF

Dr. ASHUTOSH SHARMA

DEPARTMENT OF ARCHITECTURE AND PLANNING

MAULANA AZAD NATIONAL INSTITUTE OF TECHNOLOGY

BHOPAL (MP)-462003

© MAULANA AZAD NATIONAL INSTITUTE OF TECHNOLOGY, BHOPAL – 2025

ALL RIGHTS RSERVED

DEPARTMENT OF ARCHITECTURE AND PLANNING

MAULANA AZAD NATIONAL INSTITUTE OF TECHNOLOGY, BHOPAL

CANDIDATE DECLARATION

The Thesis Project in the subject ARC 511, entitled "**Ayurvedic Hospital and College, Shahdol, Madhya Pradesh, India"**, is being submitted in partial fulfilment of the requirement for the award of degree of Bachelor of Architecture by the undersigned for evaluation.

The matter embodied in this project is a record of my own work. If, in future, it is found that the above statement is false, then I have no objection in withdrawal of Bachelor of Architecture Degree awarded to me by the Institute.

Date: 1st – 2nd Dec, 2025

RITESH SONAWANE
211110017

RECOMMENDATION

Based on the above declaration of the student, the undersigned recommends that the work submitted by the candidate may be considered for the final end term examination of the subject ARC-511, Thesis Project.

Date: 1st – 2nd Dec, 2025

Dr. ASHUTOSH SHARMA
Thesis Guide

CERTIFICATION OF EXAMINATION

The Bachelor of Architecture Thesis Viva-Voce examination of Mr. RISHI DHOLA Scholar No.211110017, was held on 1/12/2025 to 2/12/25.

Dr. Nakul Dhagat
Head of Department

Dr. Vicky Lalramsangi
Thesis Coordinator

ABSTRACT

This report provides an analytical overview of the operational framework, clinical efficacy, and service standards of a selected Ayurvedic Hospital. The study evaluates the facility's adherence to classical *Ayurveda* principles, focusing on treatment protocols, *Panchakarma* unit performance, and quality of herbal dispensary management. Data was collected through on-site audits and patient satisfaction surveys. Key findings indicate a successful implementation of holistic care models with a high degree of patient acceptance. The abstract concludes with strategic recommendations aimed at optimizing workflow efficiency and expanding community outreach for promoting traditional Indian medicine.

ACKNOWLEDGMENT

We would like to express our deepest gratitude to all those who provided guidance, support, and resources necessary for the successful completion of this comprehensive report on Ayurvedic Hospital.

We extend our sincere appreciation to ***Dr.ASHUTOSH SHARMA,*** *from Maulana Azad Institute of Technology whose expert guidance, insightful supervision, and constant encouragement steered this project in the right direction and helped shape the research methodology and final documentation.*

Finally, we would like to thank our colleagues and friends for their constructive feedback and unwavering moral support throughout the duration of this project.

This work is a testament to the collaborative spirit and commitment to the promotion of traditional medicine.

Ritesh Sonawane

Table of Contents

.....i



..... iii

CANDIDATE DECLARATION iii

ABSTRACT.....iv

ACKNOWLEDGMENT v

SYNOPSIS..... Error! Bookmark not defined.

Introduction to Ayurveda: 1

Ayurvedic treatment 2

Why Ayurveda is best?.....3

Need of the project 3

Why I choose this project? 3

Aim.....3

Objectives.....4

Scope 4

LITERATURE REVIEW 4

Brief about Ayurveda 4

Principles of Ayurveda.....5

Ayurveda treatment and its types 6

Panchakarma treatment 7

Key Factors to remember while designing a hospital 8

Design Brief & Project Overview 10

Project:.....10

Location:.....10

Proposing Agency: 10

Project Overview:.....10

Site Details : 11

Location 11
Site Area: 11
Topography: 11
Climatic Analysis: 13
Accessibility & Site Surroundings: 22
Requirements: 23
ELECTRICAL SERVICE 31
Emergency Power Backup System 31
HVAC 33
Equipment Room for Central Air Conditioning Plant 33
Design Considerations 36
System Analysis and Selection 36
WATER SUPPLY 38
RAIN WATER HARVESTING 41
SEWAGE TREATMENT 42
IPHS Guidelines-2022 42
NBC CHAPTER 3 48
CASTE STUDIES: 74
Live Site Study1 – 74
Design Brief – 74
Purpose: 75
Location : 75
AREA STATEMENT - 75
SURROUNDING AND ACCESSIBILITY 76
Spaces : 77
Hospital Block- A Hospital Block - B 77
Ground Floor Ground Floor 77
..... **Error! Bookmark not defined.**
Hospital Block- A Hospital Block - B 79
First Floor First Floor 79
..... 80

Hospital Block- A Hospital Block - B 80
Second Floor Second Floor.....80
.....82
.....83
Hospital Block- A Hospital Block - B 83
Third Floor ThirdFloor 84
.....85
Hospital Block- A Hospital Block - B 85
Fourth Floor Fourth Floor.....85
.....86
Hospital Block- A 86
Fifth Floor 86
BASEMENT 87
.....88
Administrative block.....88
Ground floor.....88
First floor 88
Second floor 89
Third Floor 89
Fourth Floor 89
Fifth floor 90
Sixth floor 90
Seventh floor 90
.....92
LIVE SITE STUDY 2-.....93
.....93
Design Brief – 93
Proposing Agency: 93
Location : 93
Vision & Objective:.....94
Area 94

Surroundings: 94
Access & Approach: 94
Site Features: 94
Functional Zoning & Planning 95
Circulation Strategy 96
DESK CASE STUDY 1- 102
Introduction 102
Location: 103
Sun and Wind path 106
DESK CASE STUDY 2 116
Introduction 116
Location 116
Site Plan 117
Planning 117
REFERENCE 122
Hospital Design & Area Standards 122

Ayurveda

INTRODUCTION TO AYURVEDA:

Ayurveda is a Sanskrit word that means “science of life” or “knowledge of life,” It is the oldest whole-body healing system, developed more than 5000 years ago in India.



According to Ayurveda, everything in the world is connected either dead or alive. If one balances the mind, body, spirit, and environment, then he/she can live a healthy life. If this balance is disturbed, one can get sick. This balance can be disrupted by genetics or birth defects, injuries, climate and seasonal change, age, and emotions.

They believe that every person is made of five basic elements found in the universe-space, fire, water, and earth. The human body is a combination of these elements and forms life forces or energies called doshas. They control how your body works. these are three types-vata dosha (space and air), Pitta dosha (fire and water), and kapha dosha (water and earth).

Vata dosha-This is the most powerful of all doshas.it controls your mind, breathing, blood flow, heart functions, and ability to get rid of waste through your intestines.it can be disrupted by eating again too soon after a meal, fear, and staying up late. If Vata is your dominant dosha, you may be smart, creative, vibrant and your mood swings change quickly. physically you may be thin and lose weight easily and are usually cold. if you are overstimulated you can have anxiety, phobias and be forgetful, asthma, heart disease, and skin problems can occur.

Pitta dosha-Digestion, metabolism are controlled under this. Things that can disrupt pitta are eating sour or spicy foods or missing meals. If one is pitta dominant, then he/she can be goal oriented, competitive, confident and a natural leader. your body can be hot most of the time.The imbalance can make you be too competitive, and cranky, and can get easily get anger. You may have high blood pressure or indigestion or fever.

Kapha dosha-It controls muscle growth, body strength and stability, weight, and our immune system. Daytime naps, eating more sugar, or drinking drinks with more sugar and salts. If one has it dominant, one can stick to expectations and be accepting, calm and patient. Physically he/she can have broad frame and can easily get weight. the imbalance can cause fatigue, be possessive, stubborn, and depressed. cancer, diabetes, asthma, and obesity can be cause by imbalance of this dosha.



AYURVEDIC TREATMENT

The ayurvedic treatment is focused on individual design. The experts consider unique physical and emotional aspects of the individual and set their treatment plans accordingly. there are variety of medicines in ayurveda to balance our health and avoid diseases. These can consist of herbal medicine, yoga, medication, counselling, and purification programs. Oil

massage, breathing exercises (known as pranayama), and repeating mantras, or phrases are also included.

WHY AYURVEDA IS BEST?

Ayurveda is best because it treats the human body, and focuses on the connection between your mind, body, and soul.

-It focuses on the root problem not just the symptoms

-Uses tested techniques.

-It works on both prevention as well as cure.

-It is available for every type of disease.

-It helps us to consider our health first and live a healthy lifestyle.

-These are not as expensive as other medicinal treatments.

-Ayurveda does not have any side effects.

-It may take time for the treatment but will remove the treatment from its roots.

NEED OF THE PROJECT

In today's life, it is observed that people at a young age are facing disease, small children also go through it, and every child has spectacles on their eyes in their childhood. To get rid of these, they do several medications and treatments but still fail to escape from it. Ayurveda is a science that eliminates the problem from its roots, it may take time more than other treatments but the results are worth it.

Mental peace, relaxation, and meditation are very much required in today's stressful life. But we are so busy with our work that we forget to firstly manage our lifestyle, and our health which is the most important thing. So Ayurvedic hospitals give a platform where people can get rid of the diseases or problems they are facing healthily, and naturally, and can also improve their lifestyle.

Ayurvedic hospitals are much needed to move towards healthy lifestyle and wellness.

WHY I CHOOSE THIS PROJECT?

Healthcare projects have always seemed quite interesting to me as how someone's life, health, and wellness depend upon their lifestyle and the treatments they receive in the hospitals. Hospitals play a very crucial role in this universe. The design of hospitals and how they are linked with the natural environment matters a lot in the functioning of a hospital. Therefore, to understand the architectural influence on hospital design and its working, I chose this project for my thesis.

AIM

To design a healing centric ayurvedic hospital integrated with an academic institute.

OBJECTIVES

- To Develop a calm and serene environment.
- To Use the concept of biophilic design for the connection of humans with nature.
- To Connect the living and non-living spaces by using five elements of Ayurveda.
- To bring together architecture and Ayurveda.
- To Use local materials.

SCOPE

- The site has an area of 10 acres and a 100-bed hospital will be designed. The hospital will include all the facilities required for the Ayurvedic treatment of people.
- Inpatient service, outpatient services, specialized ayurvedic treatments, panchakarma therapies, herbal medicine dispensary, yoga, and meditation hall, all will be designed on the hospital premises.
- An Ayurvedic hospital in Ambala will help the people to learn more about the significance of Ayurveda.

LITERATURE REVIEW

BRIEF ABOUT AYURVEDA

Ayurveda, popularly known as the Indian system of medicine, is gaining worldwide recognition day by day (Sarang Dharan, 2009). It is the ancient Indian health care system and is the world ‘s oldest and comprehensive system of natural medicine.

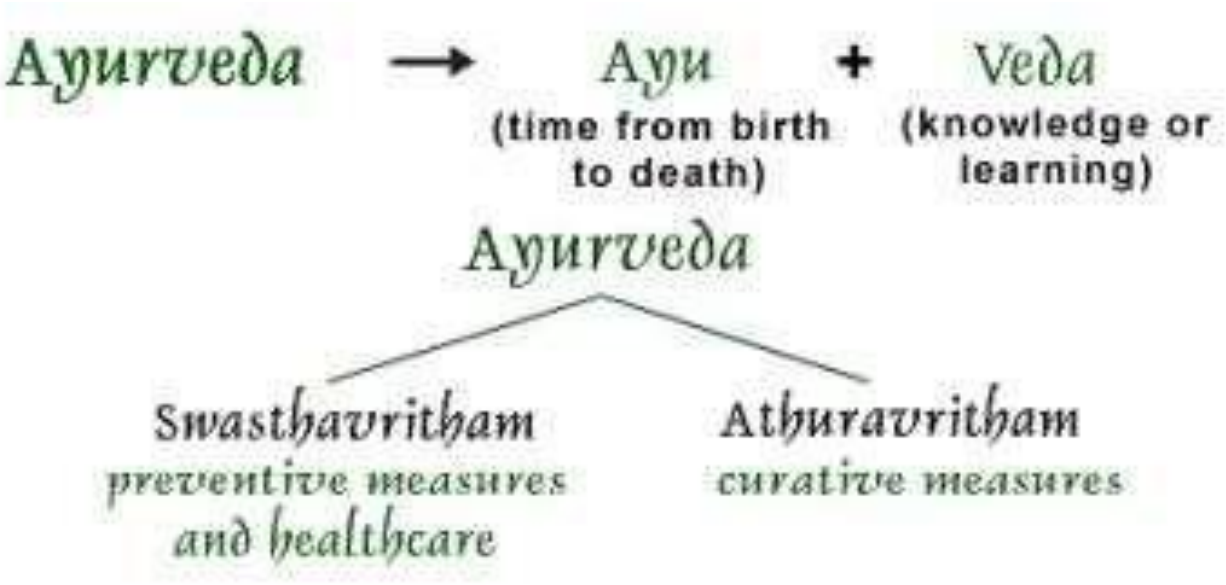

Figure 1 Meaning of ayurveda

Ayurveda is grounded in Hinduism and Vedic texts dating back 3,500 years or even before. Ayurveda, knowledge, or science of life represents a sophisticated system of healing that offers approach to living based on the balance and nurturance of mind, body, and spirit (Shroff 2000, cited by Spitzer, 2009). Ayurveda dictates the social norms for an individual. This helps in maintaining spiritual health and also elaborates on the daily routine and seasonal routine.

According to ayurveda, man is influenced to a great extent by his environment which affects their health status too. These routines include diets, habits, and a general attitude towards life. These are to be changed according to the age and sex of an individual, his living condition, and the environment. This helps the body to maintain its natural resistance to diseases. Ayurveda like other systems of traditional medicine has its unique features. It lays emphasis on the promotion of positive health and prevention of diseases. In the treatment prescribed, it does not aim at correcting the affected part alone.

The treatment always aims at correcting the site of origin. Yoga and Tantra which are primarily meant for spiritual attainments have also certain prescriptions for the prevention and care of psychic, somatic, and psychosomatic ailments. They have a rich tradition of the use of plants, minerals, and animal products having therapeutic utility.

PRINCIPLES OF AYURVEDA

Ayurveda briefly explains the knowledge of the dos and don’ts one must follow, which favours the well-being of everyone to lead a healthy, happy, and comfortable life, both

physically and mentally. It also emphasizes that prevention is better than cure. Ayurveda is also known as Ashatangaveda (the word literally means eight branches of knowledge). The eight specialized branches are:

1. Kaya Chikitsa – General Medicine

2. Kaumara Chikitsa – Pediatrics

3. Graha Chikitsa – Psychiatry

4. Shalakya Thantra – Diseases of ear, nose, throat, head and its surgery

5. Shallya Thantra – General Surgery

6. Aganta Thantra – Toxicology

7. Rasayana Chikitsa – Rejuvenation therapy

8. Vajeekarana Chikitsa – Aphrodisiac therapy



AYURVEDA TREATMENT AND ITS TYPES

Ayurveda treatments are the methods that offer assistance either kill or normalize dismal doshas or to work as a palliative in activity. The purposeful of ayurvedic medicines is to upgrade the recuperating strategy by disposing of the gathered horrible doshas. The medications in Ayurveda can be classified into two categories depending on their mode of action.

Shodana – Cleansing procedures

Shamana – Palliative remedy

The purpose of shodhana treatment is chosen depending on numerous components like age, infection, the state of dosha, etc. Shodana treatments are planning to cleanse the framework to accomplish the maximum benefits of the drugs utilized within the treatment. These treatments are moreover known as panchakarma treatment.

Shamana treatment is prompted when the doshas can be treatable with pharmaceutical and other treatments. Once more this too depends on other variables like those who are not fit to experience shodana treatment, matured people, children and in pregnancy, etc.

PANCHAKARMA TREATMENT

Panchakarma is an Ayurvedic treatment that includes Pancha(five) karmas (activities) that makes a difference in cleansing the body of gathered poisons with an point to reestablish wellbeing. Your doctor, who assesses your different physical and mental parameters, would be the leading judge to select the correct cleansing procedures for you. Cleansing is done by cleansing poisons through diverse routes.

It is a part of the Ayurvedic treatment philosophy that originated nearly 5,000 years ago. The Pandits who developed the Ayurvedic principles and wrote treatises referred to this treatment in their texts. Images of Lord Dhanwanthari, who is considered the forefather of Ayurveda, is shown holding a leech in his hand for a bloodletting procedure to remove localized impure blood. The Charaka Samhita written more than 3,000 years ago is about the concept of Panchakarma. Since then, the system has developed over the years and processes like bloodletting are still being practiced using modern tools to help resolve certain illnesses effectively.

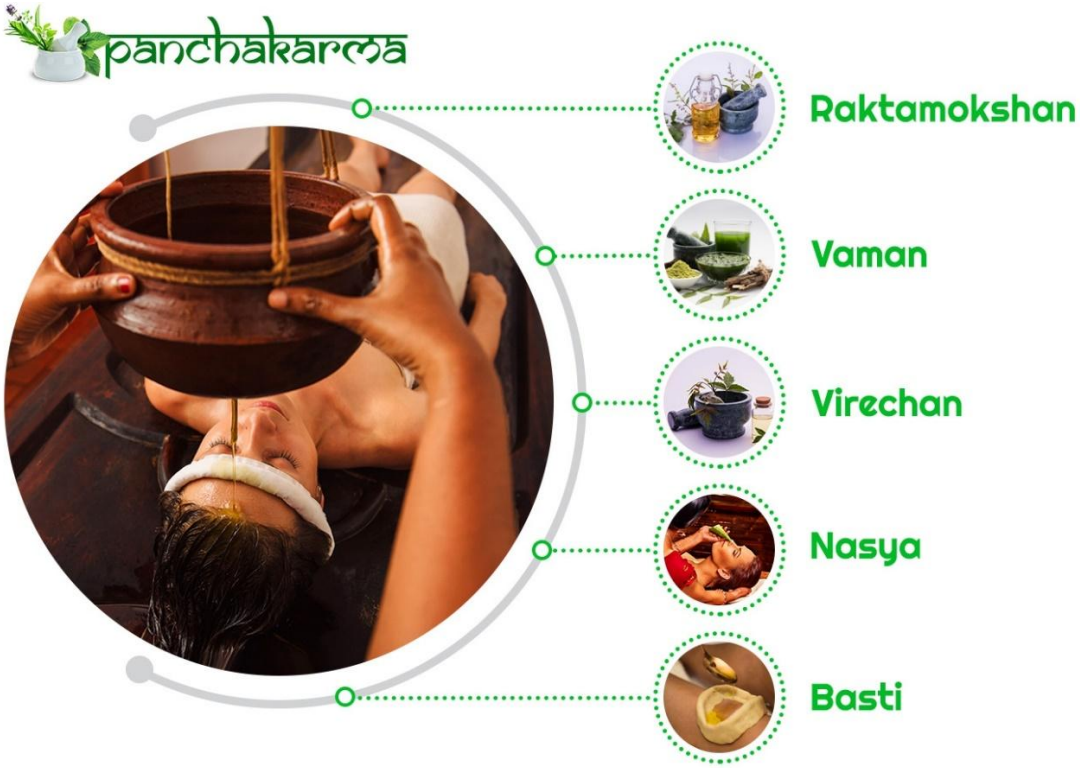

KEY FACTORS TO REMEMBER WHILE DESIGNING A HOSPITAL

Hospital design is a complex which requires careful considerations of various factors.it is place for healing, care and support for patients and their families. It is a combination of both medical treatment and emotional well-being. Some of the essential considerations are as follows:

- **Functionality and flow**
  Functionality and well-planned flow are the most important factor while designing a hospital. The distances between departments should be minimum. The path that a patient takes from arrival to different treatments areas should be considered. The design should provide easy navigation for patients, visitors, and medical personnel.

- **Patient Centric Approach**
  The patient experience should be filled with ease and comfort. The physical environment can have a great impact on patient's emotional and mental wellbeing.

Incorporating comfortable waiting area, private patient rooms, and spaces that allow for natural light and views of nature will add a positive impact. calm and positive atmosphere can contribute to the healing process.

- **Flexibility**
  As health care is an ever-evolving field, hospital should be designed in such a way that it can easily adapt new technologies and changes in patient car approach. design should be flexible enough to stand over the years.

- **Collaboration and Communication**
  A hospital is a place where a lot of medical professionals work together. Design should encourage communication and teamwork. Inviting common areas could provide them a platform to share ideas, leading to better patient care.

- **Technology Integration**
  Ensuring the integration of various technological systems which may include electronic health records, telemedicine capabilities, and advanced imaging equipment.

- **Infection control and safety**
  Proper ventilation, easily cleanable surfaces, and spatial layouts that minimize the risk of cross-contamination should be provided. Safety measures like clearly marked exits, fire-resistant materials, and accessible emergency equipment should be provided in the design.

- **Sustainability and environmental impact**
  Hospitals are the major consumers of resources. Sustainability should be kept in mind while designing to reduce energy consumption and a smaller environmental footprint. We can incorporate energy-efficient lighting, and HVAC systems and utilize environment-friendly building materials wherever possible.

- **Privacy and Dignity**
  Designing Patient rooms and spaces in such a way that it maintains confidentiality and also provides necessary access for medical staff. Adequate space for family members to be with patients can provide them with emotional support.

- **Rules and regulations**
  Adequate standards and norms should be followed to ensure patient safety. The given facilities should fulfill all the requirements.

- **Aesthetic and Cultural Considerations**

The hospital's aesthetic should align with its purpose. Local culture and community preferences should be considered. A welcoming and culturally sensitive environment can enhance the overall patient experience

DESIGN BRIEF & PROJECT OVERVIEW

PROJECT:

100-Bedded Ayurvedic Hospital

LOCATION:

Village Kotma, Tehsil Sohagpur, District Shahdol, Madhya Pradesh, India.

Latitude: 23°19'55.85"N, Longitude: 81°22'44.05"E

PROPOSING AGENCY:

Ministry of AYUSH, Government of India.



PROJECT OVERVIEW:

The project proposes the design and development of a **100-bedded Ayurvedic hospital** that will serve as a regional center for holistic Ayurvedic healthcare in **Shahdol, Madhya Pradesh**. The facility is intended to combine traditional Indian healing systems with modern healthcare design principles. It will cater to outpatient and inpatient care, Panchakarma therapy, diagnostics, research, education, and wellness.

This hospital will be equipped with comprehensive Ayurvedic treatment facilities, with a strong focus on **Panchakarma**, **herbal medicine**, and **preventive health practices**. The aim is to create an eco-sensitive, patient-friendly, and sustainable environment conducive to Ayurvedic healing.

SITE DETAILS :

LOCATION: Village Kotma, Tehsil Sohagpur, District Shahdol, Madhya Pradesh, India.

Latitude: 23°19'55.85"N, Longitude: 81°22'44.05"E

SITE AREA: 11.77 acres (47,600 sqm)

- **Proximity to Town Center**: Approximately **4 km** from **Shahdol Railway Station**, ensuring convenient access for both students and patients.
- **Access to Main Roads**: Accessible via local roads that connect to **State Highway 9 (SH-9)** and **National Highway 43 (NH-43)** — vital for emergency vehicle movement and institutional connectivity.
- **Surrounding Context**: The area consists of a **mix of agricultural fields**, **residential clusters**, and a few **institutional buildings**, offering a peaceful and semi-urban environment conducive to healing and learning.
- **Connectivity**:
    - **Good road connectivity** with nearby towns and Shahdol city.
    - **Potential for improved public transport**, especially to support daily commuters and patients from nearby rural areas.

TOPOGRAPHY: The soil in Shahdol is mostly lateritic, mixed with forest loam and black cotton soil in lowland areas. This makes the land moderately fertile and suitable for vegetation, especially medicinal plants, which is significant for an Ayurvedic setup.

- Predominantly **flat terrain with a little contour**, facilitating easy construction.
- **Ample open space** suitable for campus-style development, including herbal gardens and open courtyards.

PROPOSED 100 BEDDED AYURVEDIC COLLEGE AND 100 SEATER TEACHING HOSPITAL AT DIFFERENT LOCATION IN M.P.



Land allotted 11.77 acres

SURVEY PLAN (SHAHDOL)



CLIMATIC ANALYSIS:

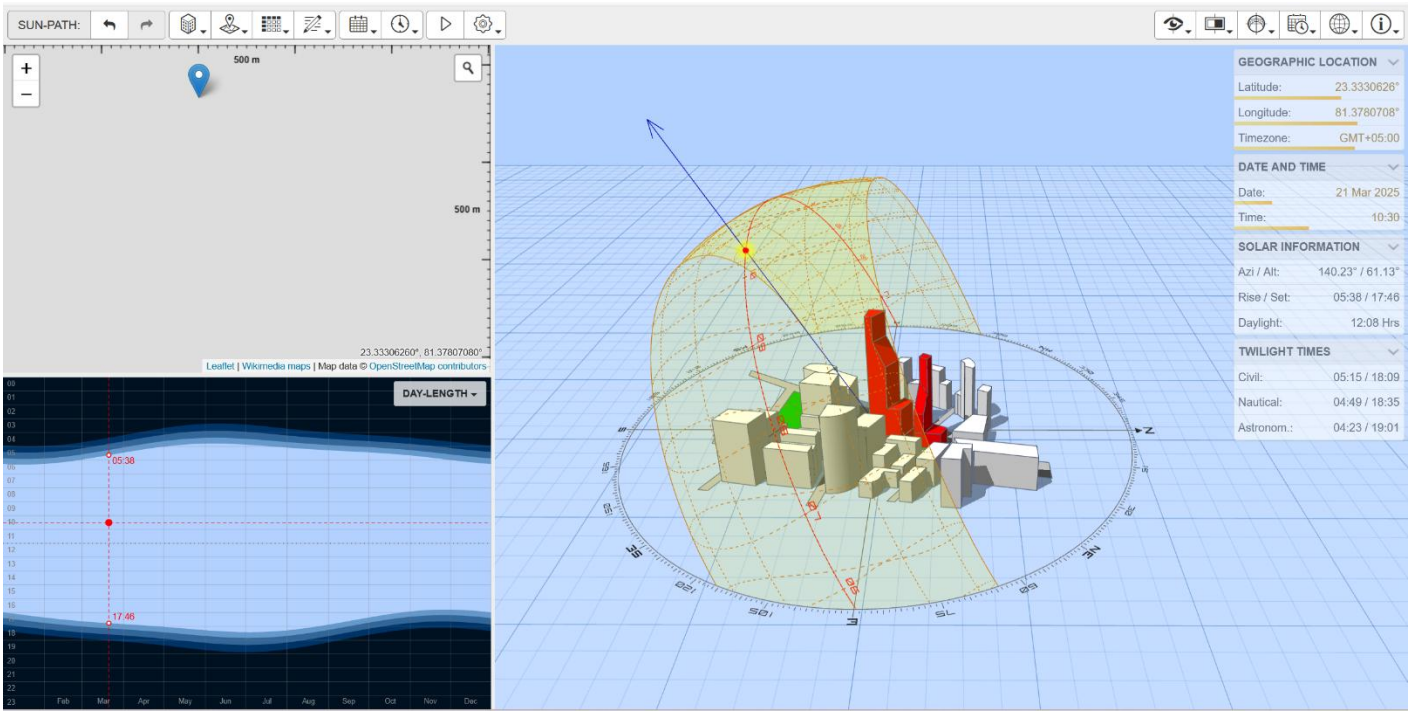

Red line: Average high temperatures (°C)

Blue line: Average low temperatures (°C)

Blue bars: Average monthly rainfall (mm)

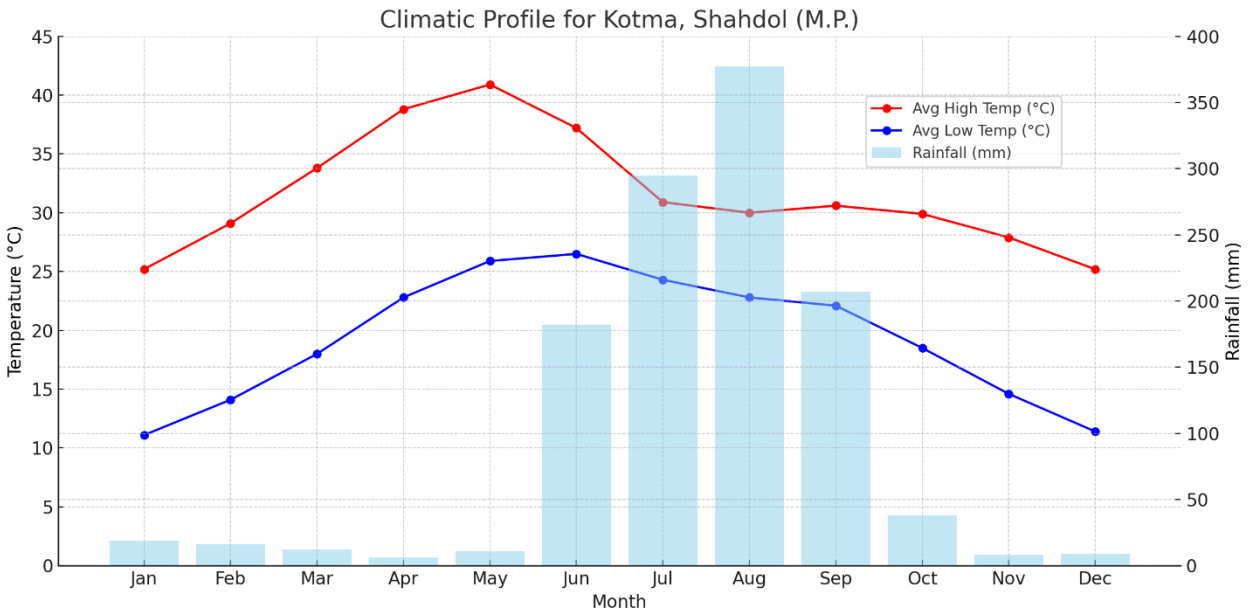

Annual rainfall: ~1,300 mm (other sources range ~1,068 mm to ~1,386 mm).

Wettest months: July–August, with ~295 mm in July (over ~26 rainy days) and ~377 mm in August (~16–18 rainy days),

Monsoon period: June–September (southwest monsoon), providing the bulk of rainfall.

Dry season: October through April (November and December driest, ~8 mm rainfall in November)

Site Planning Based on Climate:

Building Orientation:

Orient longer facades toward north-south to minimize heat gain.

Use buffer zones (like corridors, service areas) on the west facade.

Setbacks & Green Belts:

Create green buffers with native medicinal plants to reduce dust and increase shade.

Use trees like neem, amla, tulsi, and ashwagandha around the OPD and inpatient wards for both therapeutic and shading purposes.

Ventilation & Passive Cooling:

Use of jaalis, verandahs, and courtyards for cross-ventilation.

Ensure of windward openings from the southwest and exhaust vents on the northeast side.

Implement of wind towers or stack ventilation chimneys in wards and therapy rooms.

Daylighting & UV Protection:

Installation of deep overhangs, chajjas, and louvered screens to filter harsh summer sunlight.

Use of low-e glass or UV protective films in glazing for indoor therapy and consultation spaces.

Plan shaded outdoor therapy areas and walking tracks with pergolas.

In Shahdol, the wet season is oppressive and overcast, the dry season is mostly clear, and it is hot year round. Over the course of the year, the temperature typically varies from *51°F* to *104°F* and is rarely below *45°F* or above *110°F*.

Based on the beach/pool score, the best times of year to visit Shahdol for hot-weather activities are from *mid March* to *early May* and for the entire month of *October*.

3.2.1. Average Temperature

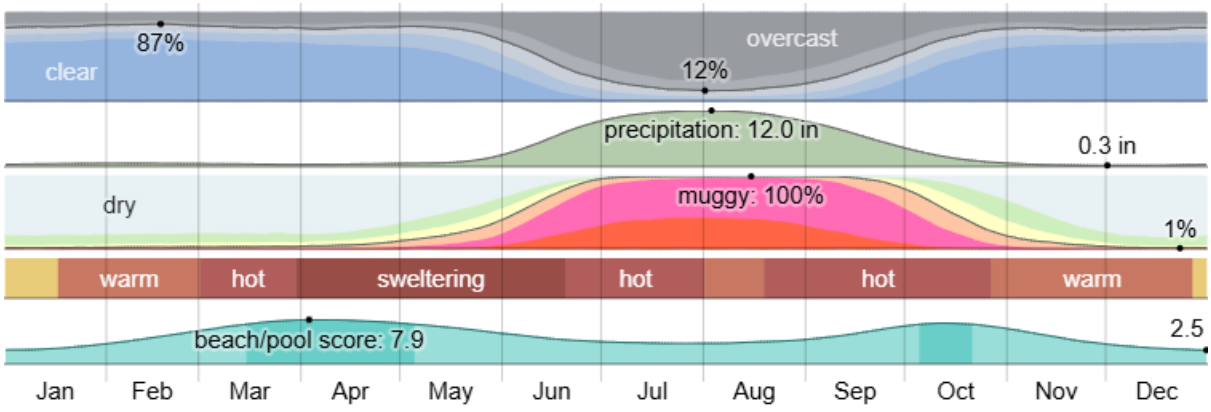

Monthly Weather in Shahdol

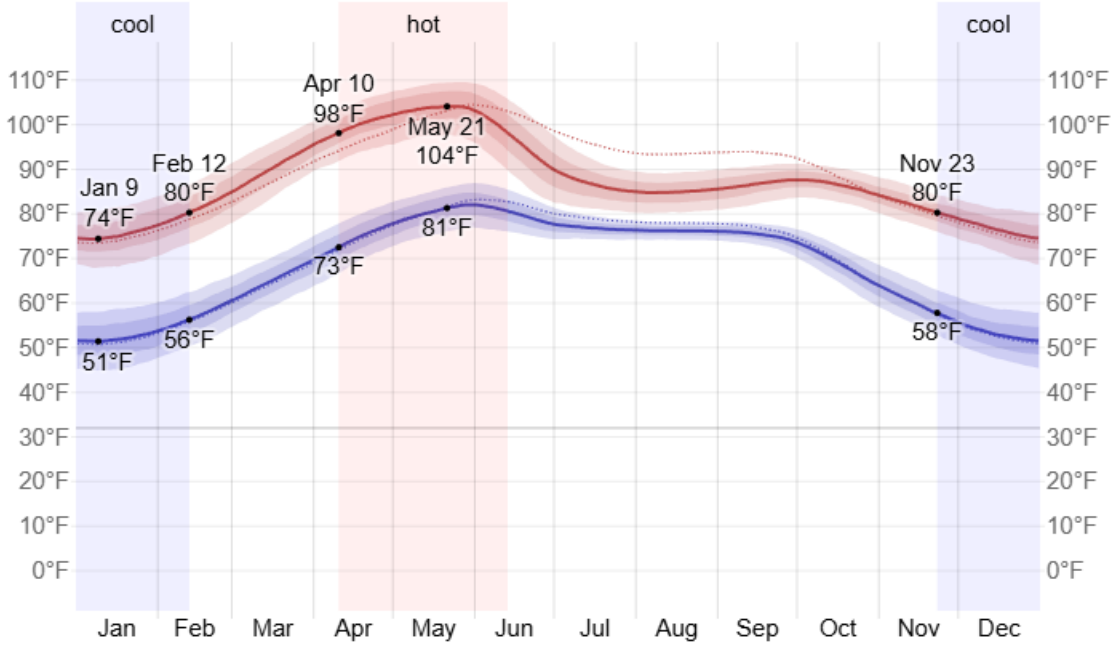

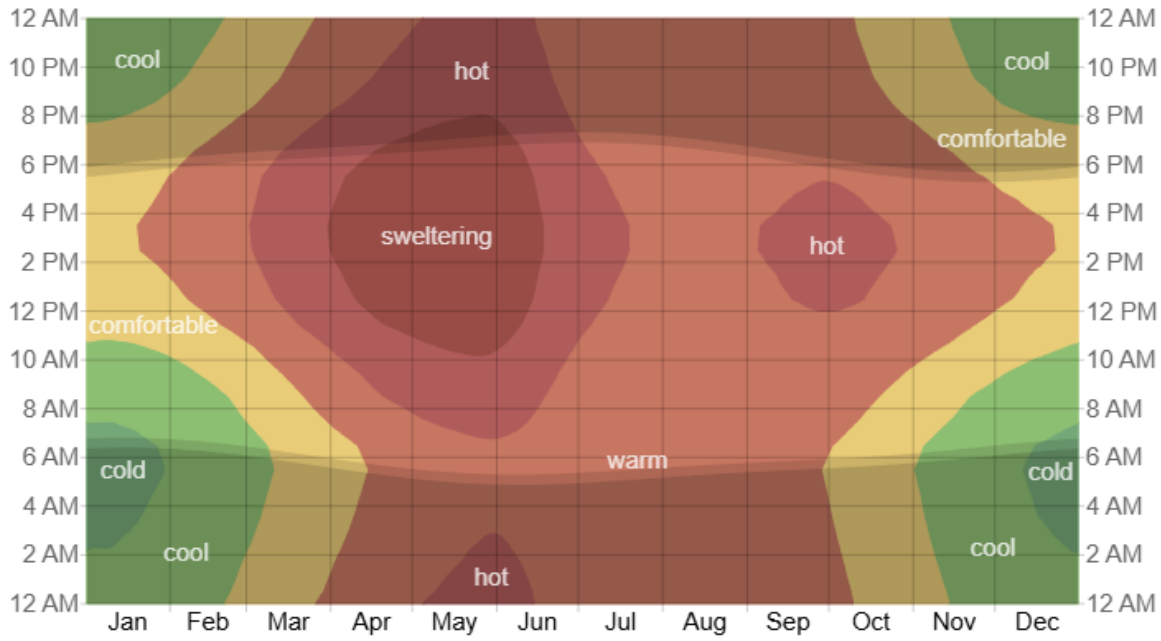

Average Hourly Temperature in Shahdol

3.2.2. Clouds

In Shahdol, the average percentage of the sky covered by clouds experiences *extreme* seasonal variation over the course of the year.

The *clearer* part of the year in Shahdol begins around *September 27* and lasts for *8.5 months*, ending around *June 13*.

The clearest month of the year in Shahdol is *February*, during which on average the sky is *clear*, *mostly clear*, or *partly cloudy 86%* of the time.

The *cloudier* part of the year begins around *June 13* and lasts for *3.5 months*, ending around *September 27*.

The cloudiest month of the year in Shahdol is *August*, during which on average the sky is *overcast* or *mostly cloudy 86%* of the time.

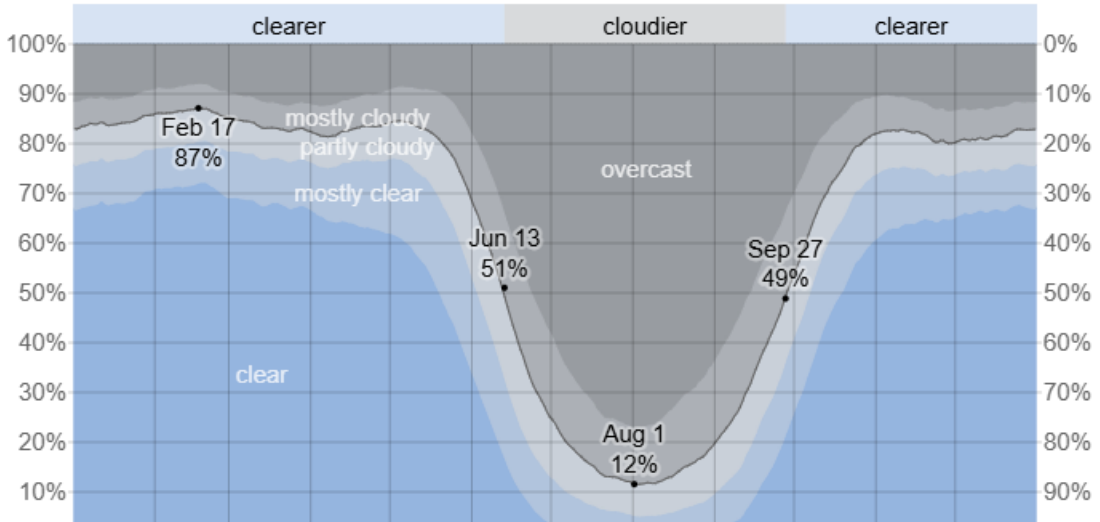

3.2.3. Precipitation

A *wet day* is one with at least *0.04 inches* of liquid or liquid-equivalent precipitation. The chance of wet days in Shahdol varies very significantly throughout the year.

The *wetter season* lasts *3.3 months*, from *June 12* to *September 22*, with a greater than *37%* chance of a given day being a wet day. The month with the most wet days in Shahdol is *July*, with an average of *21.5 days* with at least *0.04 inches* of precipitation.

The *drier season* lasts *8.7 months*, from *September 22* to *June 12*. The month with the fewest wet days in Shahdol is *December*, with an average of *1.2 days* with at least *0.04 inches* of precipitation.

Among wet days, we distinguish between those that experience *rain alone*, *snow alone*, or a *mixture* of the two. The month with the most days of *rain alone* in Shahdol is *July*, with an average of *21.5 days*. Based on this categorization, the most common form of precipitation throughout the year is *rain alone*, with a peak probability of *72%* on *July 22*.

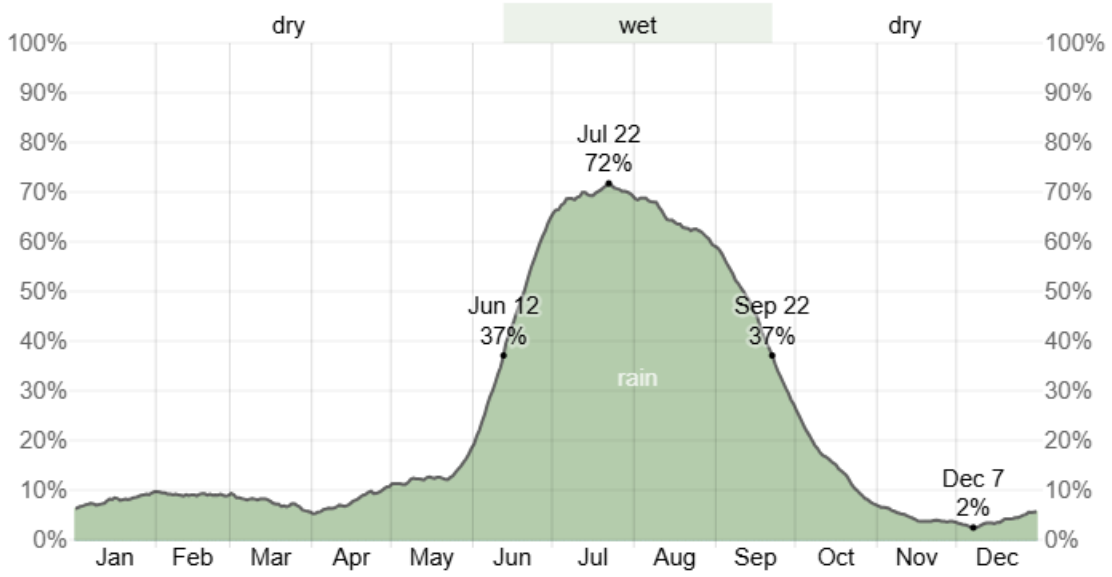

Daily Chance of Precipitation in Shahdol

3.2.4. Rainfall

To show variation within the months and not just the monthly totals, we show the rainfall accumulated over a sliding 31-day period centered around each day of the year. Shahdol experiences *extreme* seasonal variation in monthly rainfall.

The *rainy* period of the year lasts for *10 months*, from *January 2* to *November 8*, with a sliding 31-day rainfall of at least *0.5 inches*. The month with the most rain in Shahdol is *August*, with an average rainfall of *11.5 inches*.

The *rainless* period of the year lasts for *1.8 months*, from *November 8* to *January 2*. The month with the least rain in Shahdol is *December*, with an average rainfall of *0.3 inches*.

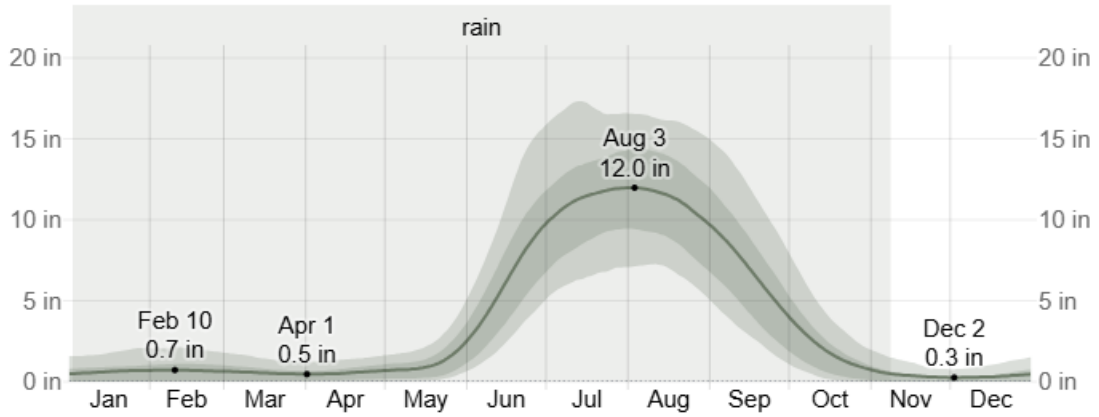

Average Monthly Rainfall in Shahdol

3.2.5. Sun

The length of the day in Shahdol varies over the course of the year. In 2025, the shortest day is *December 21*, with *10 hours, 42 minutes* of daylight; the longest day is *June 21*, with *13 hours, 34 minutes* of daylight.

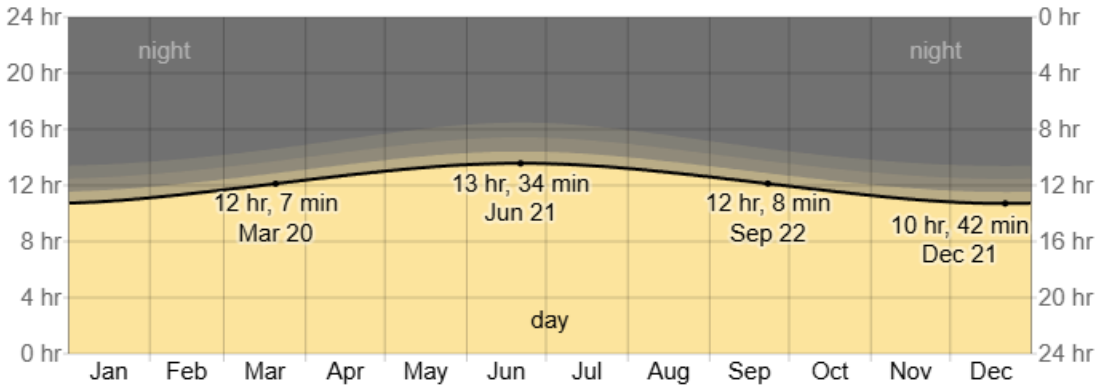

: Hours of Daylight and Twilight in Shahdol

The earliest sunrise is at 5:17 AM on June 8, and the latest sunrise is 1 hour, 30 minutes later at 6:48 AM on January 15. The earliest sunset is at 5:17 PM on November 27, and the latest sunset is 1 hour, 37 minutes later at 6:54 PM on July 3.Daylight saving time (DST) is not observed in Shahdol during 2025.

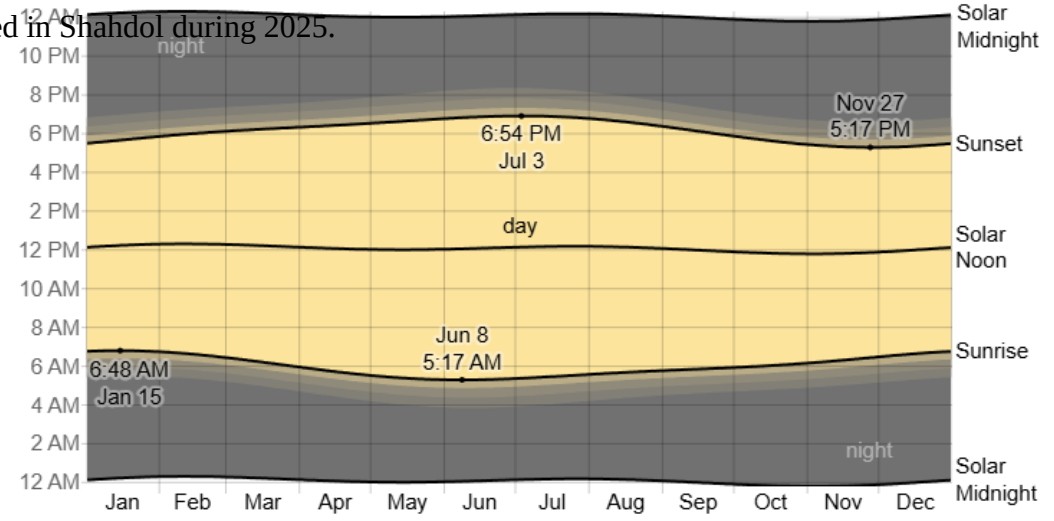

Sunrise & Sunset with Twilight in Shahdol

The solar day over the course of the year 2025. From bottom to top, the black lines are the previous solar midnight, sunrise, solar noon, sunset, and the next solar midnight. The day, twilights (civil, nautical, and astronomical), and night are indicated by the color bands from yellow to gray.

3.2.6. Humidity

The humidity comfort level on the dew point, as it determines whether perspiration will evaporate from the skin, thereby cooling the body. Lower dew points feel drier and higher dew points feel more humid. Unlike temperature, which typically varies significantly between night and day, dew point tends to change more slowly, so while the temperature may drop at night, a muggy day is typically followed by a muggy night.

Shahdol experiences *extreme* seasonal variation in the perceived humidity.

The *muggier period* of the year lasts for *5.1 months*, from *May 22* to *October 26*, during which time the comfort level is *muggy*, *oppressive*, or *miserable* at least *25%* of the time. The month with the most *muggy days* in Shahdol is *August*, with *31.0 days* that are *muggy* or worse.

The month with the fewest *muggy days* in Shahdol is *December*, with *0.3 days* that are *muggy* or worse.

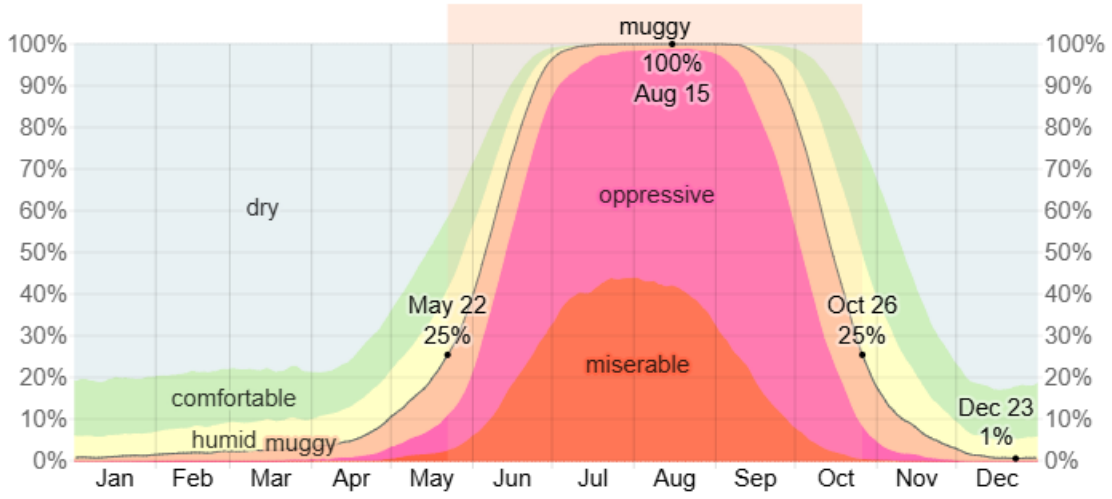

: Humidity Comfort Levels in Shahdol

3.2.7. Wind

This section discusses the wide-area hourly average wind vector (speed and direction) at *10 meters* above the ground. The wind experienced at any given location is highly dependent on

local topography and other factors, and instantaneous wind speed and direction vary more widely than hourly averages.

The average hourly wind speed in Shahdol experiences *significant* seasonal variation over the course of the year.

The *windier* part of the year lasts for *5.7 months*, from *March 14* to *September 6*, with average wind speeds of more than *7.0 miles per hour*. The *windiest* month of the year in Shahdol is *June*, with an average hourly wind speed of *9.1 miles per hour*.

The *calmer* time of year lasts for *6.3 months*, from *September 6* to *March 14*.
The *calmest* month of the year in Shahdol is *November*, with an average hourly wind speed of *4.7 miles per hour*.

The predominant average hourly wind direction in Shahdol varies throughout the year.

The wind is most often from the *west* for *3.4 weeks*, from *April 15* to *May 9* and for *3.6 months*, from *June 3* to *September 20*, with a peak percentage of *59%* on *July 7*. The wind is most often from the *north* for *3.6 weeks*, from *May 9* to *June 3* and for *6.8 months*, from *September 20* to *April 15*, with a peak percentage of *43%* on *May 22*.

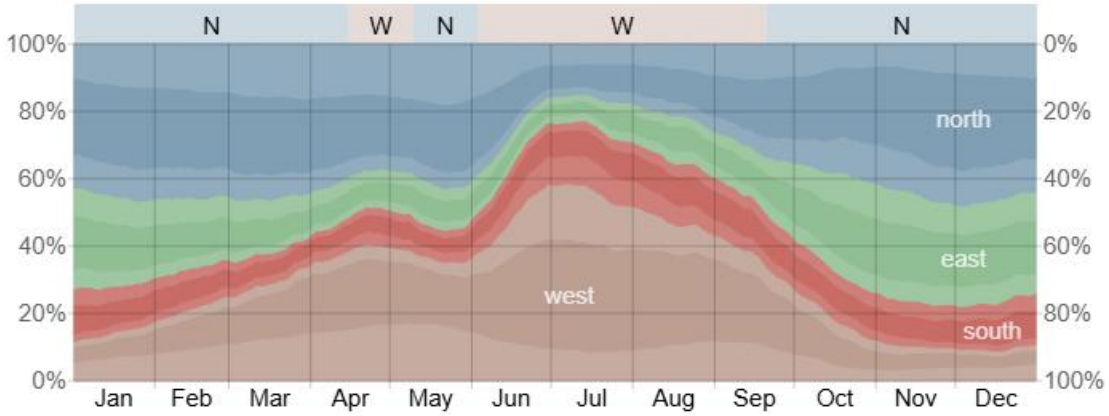

: Wind Direction in Shahdol

The percentage of hours in which the mean wind direction is from each of the four cardinal wind directions, excluding hours in which the mean wind speed is less than 1.0 mph. The lightly tinted areas at the boundaries are the percentage of hours spent in the implied intermediate directions (northeast, southeast, southwest, and northwest).

ACCESSIBILITY & SITE SURROUNDINGS:



Shahdol railway station: **9.1 km** Distance



Shahdol Bus Stand: **4.9 km** Distance



Amrita Hospital Shahdol: **4.7 km** Distance

Connected main road on the west side of the site

Foster School: **5.2 km** Distance

REQUIREMENTS:

REQUIRMENTS

		No (Blocks)	Total Built up
1	HOSPITAL BLOCK	1	9,180.00
2	ACADMIC BLOCK	1	10,135.00
3	100 Seater Girls Hostel	1	4,198.00
4	100 Seater Boys Hostel	1	4,198.00
8	'F' TYPE (3BHK) BLOCK	4	8,695.20
9	'H' TYPE (2BHK) BLOCK	1	3,216.00
11	I' TYPE (1BHK) BLOCK	2	1,814.08
12	DEAN BUNGLOW	1	270.00

REQUIRMENTS (HOSPITAL)

OUT PATIENT ZONE(OPD) (FOR 100 INTAKES)

S.NO	UNIT	MIN. AREA(IN SQM)	ENGLISH TRANSLATION OF OPD	NO. OF STAFF REQUIRED
1	Screening out patient department including screening counters Minimum number of screening counters (number of counters may be increased depending on patient footfall)	20 2		
2	Atyayika chikitsa (emergency or causality) out patient department including observation beds	30	Emergency treatment for acute health conditions	2(NURSE + AYA)
3	Swasthya Rakshana out patient department including counselling cubicles Minimum number of counselling cubicles	25 2	Health care	
4	Kayachikitsa out patient department	25	imbalances in the digestive system , Skin diseases,Arthritis Neurovascular disorders	
5	Panchakarma out patient department	25	Ayurvedic therapy that involves Pancha (five) karmas (actions) that helps in cleansing the body of accumulated toxins with an aim to restore health	
6	Procedural room or minor operation theatre for outpatient department	20		
7	Shalakya chikitsa (Netra) out patient department	30	Department of diagnosis and management of diseases occurring in EYE	
8	Shalakya chikitsa (Karna, Naasa and Mukha) out patient department	30	Department of diagnosis and management of diseases occurring in ENT	
9	Prasuti-Streeroga (in case of two out patient departments, one each for Prasuti and Streeroga) Procedural rooms (in case of two procedural rooms, one each for prasuti-Streeroga)	25 20	Gyneacology & Obstetrics in Ayurveda	2(NURSE + AYA)
10	Kaumarabhritya out patient department	25	Pediatrics of Ayurveda (focuses on the health of children from infancy to adolescence)	
11	Visha chikitsa out patient department	25	poison therapy	
12	Speciality clinics	25		
13	Online consultation facility	20		
14	Out patient department in-charge office	15		1
15	Waiting area, drinking water facility, breast feeding area, toilets, area for wheel chair and stretcher, area for keeping housekeeping materials	200		
16	Drug stores and dispensary	45		2(PHARMACIST)
	TOTAL	634		9

REQUIRMENTS

RECEPTION AND REGISTRATION ZONE (FOR 100 INTAKES) (Including Entrance lobby and circulation area =180 SQM)

S.NO	UNIT	MIN. AREA(IN SQM)	NO. OF STAFF REQUIRED
1	(a) Reception and enquiry counter or (b) Reception and enquiry counter with seating for public relation officers (optional)	3 8	4 As required
2	Registration and billing counter	15	2
3	Medical record room (in case of established hospital management information system)	10	
4	Medical Record Room (without hospital management information system) including accommodation for medical record technician	25	1
	TOTAL	180	7

ADMINISTRATIVE ZONE (FOR 100 INTAKES)

S.NO	UNIT	MIN. AREA(IN SQM)	NO. OF STAFF REQUIRED
1	Medical Director	35	NA
2	Medical Superintendent	35	1
3	Personal Assistant to Medical Superintendent	10	NA
4	Deputy Medical Superintendent	20	1
5	Administrator	20	1
6	Matron	20	1
7	Assistant Matron	15	1
8	Office Superintendent	15	1
9	Accountant and other office staff	30	2
10	Waiting lounge for visitors	15	NA
11	Residential Medical Officers room	30	3
12	Toilets	20	NA
13	Pantry	5	NA
14	Doctors lounge	30	NA
15	Interns room	50	NA
16	Staff Room	50	3
17	Meeting hall	50	NA
18	Store	75	1
	TOTAL	525	15

REQUIRMENTS (HOSPITAL)

DIAGNOSTIC ZONE (FOR 100 INTAKES)

S.NO	UNIT	MIN. AREA(IN SQM)	NO. OF STAFF REQUIRED
1	CLINICAL LABORATORY (HAEMATOLOGY OR PATHOLOGY SECTION, BIOCHEMISTRY SECTION, MICROBIOLOGY SECTION)		2- LAB TECHNICIAN,1-LAB ATTENDANT, 1 X-RAY TECHNICIAN, 1-DARK ROOM ASSISTANT, 1-ECG TECHNICIAN,1-NURSING STAFF, 1-MICROBIOLOGIST, 1- LAB ASSISTANT MICROBIOLOGY
2	IMAGING SECTION		
3	OTHER DIAGNOSTICS		
4	WAITING AREA,CIRCULATION AREA AND TOILETS		
5	DIAGNOSTIC ZONE IN-CHARGE OFFICE		
6	TEST REPORT ISSUE COUNTER	175	
	TOTAL	175	9

REQUIRMENTS (HOSPITAL)

IN-PATIENT ZONE (FOR 100 INTAKES)

MEDICAL IN-PATIENTS SECTION

S.NO	UNIT	MIN. AREA(IN SQM)	NO. OF ROOMS	NO. OF STAFF REQUIRED
1	Area required for in-patients beds (six square metre per bed)	360		
a.	Kayachikitsa Ward beds of atyayikachikitsa	120		2 Resident medical officer (one for thirty beds) 6NURSE (one for ten bed) 3 AYA(one for twenty bed)
b.	Panchakarma Ward	150		
c.	Kaumarabhritya Ward	60		
d.	Visha Chikitsa Ward	30		
2	Emergency ward and intensive care unit (two to six beds)	50 – 200		
3	Nursing counter and store (one counter for every thirty beds)	40	2	
4	Seating for interns	15		
5	Room for night duty nurse (one for every thirty beds)	40	2	
6	Room for night duty interns (male and female separately)	50	2	
7	Room for night duty doctor	25		
8	Ward procedural room	20		
9	Clinical classrooms	90	2	
10	Circulation area and corridors	30		
11	Toilets (male and female separately), drinking water facility (hot and cold), place for trolleys, biomedical waste management, clean and dirty utility, housekeeping materials, and the like	400		
	TOTAL	1220		11

SURGICAL IN-PATIENTS SECTION

S.NO	UNIT	MIN. AREA(IN SQM)	NO. OF ROOMS	NO. OF STAFF REQUIRED
12	Area required for in-patients beds (six square meter per bed)	240	1	
a.	Shalya Ward	120		2 Resident medical officer (one for thirty beds) 4NURSE (one for ten bed) 2 AYA(one for twenty bed)
b.	Shalakya Ward	60	1	
c.	Prasuti and Streeroga Ward	60	1	
13	Nursing counter and store (one counter for every twenty beds)	40	2	
14	Seating for interns	15	1	
15	Room for night duty nurse (one for every twenty beds)	40	2	
16	Room for night duty interns (male female separately)	50	2	
17	Room for night duty doctor	25	1	
18	Ward procedural room	20	1	
19	Clinical classrooms	90	2	
20	Circulation area and corridors	30		
21	Toilets (male and female separately), drinking water facility (hot and cold), place for trolleys, biomedical waste management, clean and dirty utility, housekeeping materials, and the like	400		
	TOTAL	950		8

REQUIRMENTS (HOSPITAL)

PROCEDURAL MANAGEMENT ZONE (FOR 100 INTAKES)

PANCHAKARMA THERAPY SECTION

S.NO	UNIT	MIN. AREA(IN SQM)	NO. OF ROOMS	NO. OF STAFF REQUIRED
1	Reception and waiting	20		1
2	Consultation room	25		1 SENIOR RESIDENT
3	Preparation room, store, waste management	50		1 Cook
4	Therapy rooms – male (at the rate of thirty square meter)	120	4	
5	Therapy rooms – female (at the rate of thirty square meter)	120	4	
6	Cubicle (at the rate of five square meter)	30	6	
7	Therapists room separate for males and female	40	2	8(4+4)
	TOTAL	405		11

SURGICAL THERAPY SECTION

S.NO	UNIT	MIN. AREA(IN SQM)	ENGLISH TRANSLATIONS	NO. OF STAFF REQUIRED
8	Minor operation theatre	100		2 NURSING STAFF
9	Major general operation theatre	200		3 OPERATITION THEATRE ATTENDANTS
10	Anushastra karma	50	Anushastra karma is a surgical procedure in Ayurveda that uses non-surgical instruments or is performed without surgical tools	1 ANUSHASTRA KARMA TECHNICIAN
11	Labour room	50		
12	Prasuti-streeroga procedural room	30		
13	Garbhasanskra	30	Garbhsanskar Mental and Intellectual Development of Unborn Child	3 NURSING STAFF 3 AYAH (ONE PER SHIFT)
14	Kriyakalpa section	30	Kriyakalpa is the treatment that refers to the procedures in which medications/drugs are applied in or around the eyeball as a method of treatment (SHALAKYA CHIKITSA)	2
15	Physiotherapy section	100		1 PHYSIOTHERAPIST 1 ATTENDANT
16	Yoga section	50		1 YOGA DEMONSTRATOR
	TOTAL	640		17
	HOSPITAL TOTAL AREA	4729		
	HOSPITAL TOTAL AREA AFTER ADDING 50%	7093.5	0.5	

REQUIRMENTS (HOSPITAL)

SERVICE ZONE (FOR 100 INTAKES)				
PATHYA-DIET SECTION				
S.NO	UNIT	MIN. AREA(IN SQM)		NO. OF STAFF REQUIRED
				1-INCHAGE , 2-PATHYA COOKS,2 MULTI-TASKING STAFF
CENTAL STERILIZATION				
S.NO	UNIT	MIN. AREA(IN SQM)		NO. OF STAFF REQUIRED
				1-NURSING STAFF , 1-AYA
			TOTAL	7
			TOTAL NO OF STAFF IN HOSPITAL	94

REQUIRMENTS (COLLEGE)

	College Block	100	Intake
S.No.	Block	Minimum Required Area (sqm)	No. of Staff
	Administration Zone		
1	Head of the Institution (Director or Dean or Principal) Office including anteroom and attached toilet	50	
2	Personal Assistant to head of the Institution	10	
3	Visitors lounge for visitors to head of the Institute	20	
4	Office Supritendent	10	
5	Clerical staff, establishment and accounts section with cash counter	60	
6	Visitors lounge for office visitors	20	
7	Record Room	40	
8	Central store	50	
9	Pantry	5	
10	Toilets for office staff	20	
11	College council meeting room	100	
12	Deputy Director or Deputy Dean or vice-principal	20	
13	Central workshop and maintenance cell	50	
	Sub Total I	455	sqm

Teaching Departments			
	Teaching Department	Minimum Required Area (sqm)	No. of Teaching Staff
A	Samhita Siddhanta and Sanskrit	130	
I	Teaching Staff		
	Professor	10	1
	Associate Professor	15	1
	Assistant Professor	13	3
	Language Lab	30	1
	Computer system	10	1
II	Non Teaching Staff (2no.)		
	Clerk		1
	Multi Tasking Staff		1

REQUIRMENTS (COLLEGE)

B	Rachna Sharir including dissection hall other associated units	250	sqm
I	Teaching Staff (3no.)		
	Professor	10	1
	Associate Professor	15	1
	Assitant	13	1
	Department Library		
	Dissection Hall	210	50 students
	Museum		
	Embalming room		
	Cadaver Storage		
II	Non Teaching Staff (4no)		
	Clerk		1
	cadaver lifter		1
	attendent for museum		1
	multi tasking staff		1

C	Kriya sharir including kriya laboratory and other associated units	225	sqm
I	Teaching Staff (3no.)		
	Professor	10	1
	Associate Professor	15	1
	Assitant	13	1
II	Library and Labs		
	Department Library		
	E library		10
	Physiology or Kriya Laboratory		
III	Non Teaching Staff (4no.)		
	Lab Technician		
	Clerk		1
	Lab Attenant		1
	multi tasking staff		1
			1

REQUIRMENTS (COLLEGE)

D	Dravyaguna including laboratory and other Dravyaguna including laboratory and other associated units	250	sqm
I	Teaching Staff (3no.)		
	Professor	10	1
	Associate Professor	15	1
	Assitant	13	1
II	Library and Labs ()		
	Department Library		
	E- Library		10
	Herbarium Dravgyuna Museum		
	Laboratory		
III	Non Teaching Staff (6no.)		
	Lab Technician (12th Standard pass with biology)		1
	Clerk (Graduate with computer knowledge)		1
	Lab Attendant (minimum 10th standard)		1
	Museum and Herbarium Keeper		1
	Gardener		1
	Multi-tasking staff		1

E	Rasa Shastra and Bhaishajyakalpana including teaching pharmacy	250	sqm
I	Teaching Staff (3no.)		
	Professor	10	1
	Associate Professor	15	1
	Assitant	13	1
II	Library and Labs		
	Department Library		
	E- Library		10
	Teaching Pharmacy		
III	Non Teaching Staff (4no.)		
	Instructtor		1
	Clerk		1
	Lab Attendant (minimum 10th standard)		1
	Multi Tasking Staff		1

REQUIRMENTS (COLLEGE)

F	**Quality Testing Laboratory**	**200**	**sqm**
I	Library and Labs		
	Laboratory 1no.		
II	Non Teaching Staff (5no.)		
	Analytical Chemist		1
	Clerk		1
	Pharmacognosist		1
	Lab Attendant		1
	Multi-tasking staff		1

G	**Roganidana and vikriti vijnana including Rognidana and other associated units**	**250**	**sqm**
I	Teaching Staff (3no.)		
	Professor	10	1
	Associate Professor	15	1
	Assitant	13	1
II	Library and Labs		
	Department Library		
	E- Library		10
	Pathology Laboratory		
	Museum		
III	Non Teaching Staff (4no.)		
	Lab Technician		1
	Clerk		1
	Lab Attendant (minimum 10th standard)		1
	Multi Tasking Staff		1

REQUIRMENTS (COLLEGE)

H	**Agada tantra including poison detection laboratory and other associated units**	**225**	**sqm**
I	Teaching Staff (3no.)		
	Professor	10	1
	Associate Professor	15	1
	Assitant	13	1
II	Library and Labs		
	Department Library		
	E- Library		10
	Museum		
III	Non Teaching Staff (4no.)		
	Lab Technician		1
	Clerk		1
	Lab Attendant (minimum 10th standard)		1
	Multi Tasking Staff		1

I	**Swasthavritta and yoga including Nutrition laboratory and other associated units**	**225**	**sqm**
I	Teaching Staff (3no.)		
	Professor	10	1
	Associate Professor	15	1
	Assitant	13	1
II	Library and Labs		
	Department Library		
	E- Library		10
	Nutrition Laboratory		
III	Non Teaching Staff (5no.)		
	Lab Technician		1
	Clerk		1
	Lab Attendant (minimum 10th standard)		1
	Yoga Instructor		1
	Multi Tasking Staff		1

REQUIRMENTS (COLLEGE)

J	Kayachikitsa	150	sqm
I	Teaching Staff (5no.)		
	Professor	10	1
	Associate Professor	30	2
	Assitant	26	2
II	Library and Labs		
	Department Library		
	E- Library		10
	E Disply Facility		
III	Non Teaching Staff (2no.)		
	Multi Tasking Staff		1
	Clerk		1

K	Panchakarma	100	sqm
I	Teaching Staff (4no.)		
	Professor	10	1
	Associate Professor	15	1
	Assitant	26	2
II	Library and Labs		
	Department Library		
	E- Library		10
	E Disply Facility		
III	Non Teaching Staff (2no.)		
	Multi Tasking Staff		1
	Clerk		1

REQUIRMENTS (COLLEGE)

L	Shalya tantra	150	sqm
I	Teaching Staff (3no.)		
	Professor	10	1
	Associate Professor	15	1
	Assitant	26	2
II	Library and Labs		
	Department Library		
	E- Library		10
	E Disply Facility		
III	Non Teaching Staff (2no.)		
	Multi Tasking Staff		1
	Clerk		1

M	Shalakya tantra	150	sqm
I	Teaching Staff (3no.)		
	Professor	10	1
	Associate Professor	15	1
	Assitant	26	2
II	Library and Labs		
	Department Library		
	E- Library		10
	E Disply Facility		
III	Non Teaching Staff (2no.)		
	Multi Tasking Staff		1
	Clerk		1

REQUIRMENTS (COLLEGE)

N		Prasuti-Streeroga	100	sqm
	I	Teaching Staff (3no.)		
		Professor	10	1
		Associate Professor	15	1
		Assitant	26	2
	II	Library and Labs		
		Department Library		
		E- Library		10
		E Disply Facility		
	III	Non Teaching Staff (2no.)		
		Multi Tasking Staff		1
		Clerk		1

O		Kaumarabhritya	100	sqm
	I	Teaching Staff (3no.)		
		Professor	10	1
		Associate Professor	15	1
		Assitant	26	2
	II	Library and Labs		
		Department Library		
		E- Library		10
		E Disply Facility		
	III	Non Teaching Staff (2no.)		
		Multi Tasking Staff		1
		Clerk		1
		Sub Total II = (A to O)	2755	sqm

REQUIRMENTS (COLLEGE)

Other Units of College

1	Workshop		75
2	Office, storage, circulation area, toilets		50
3	Information technology cell		50
4	Lecture halls (4no.)		150
5	Multi-purpose hall for seminar or conference or examination or yoga and the like activities		300
6	Central library		250
7	Digital library		
8		Wifi Compus	30
9		Non Wifi Campus	50
10	Language laboratory		30
11	Research Innovation and Entrepreneurship Development Cell		30
12	Co-curricular and extra curricular activities		100
13	Commonm Room Boys		50
14	Common Room Girls		50
15	Common room for non-teaching staff		40
16	Student council room		30
17	Student support, career guidance and placement cell, grievance redressal cell and Committee Against Sexual Harassment		20
18	Yogya clinical skill laboratory		250
19	Internal quality assurance cell		40

EMERGENCY POWER BACKUP SYSTEM

The emergency power supply (such as generating sets) should not be allowed to be installed above the ground floor or below the first basement level of the building. In case of DG set located in basement, the ceiling of the DG room shall be the ground floor slab.

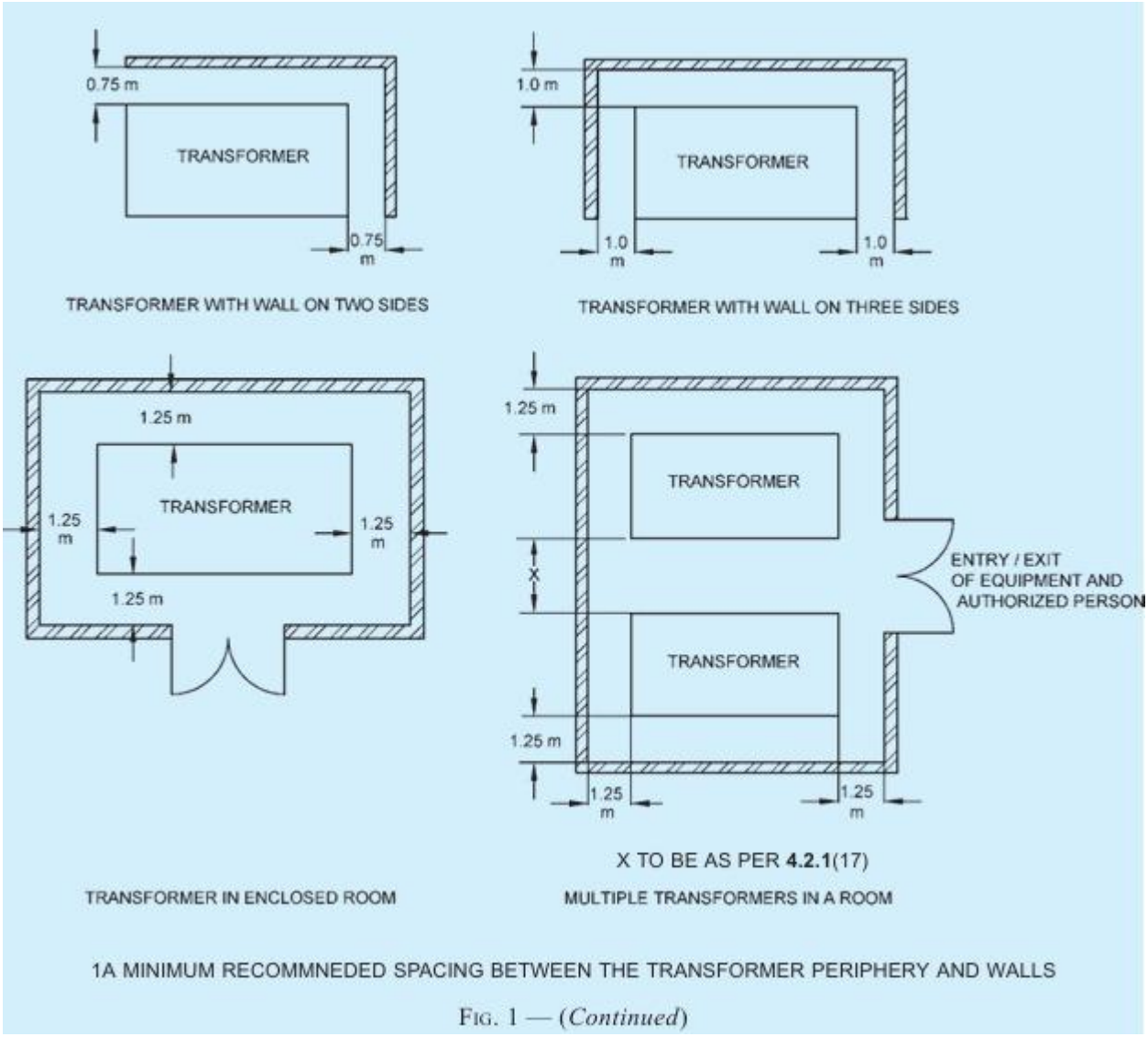

FIG. 1 — (*Continued*)

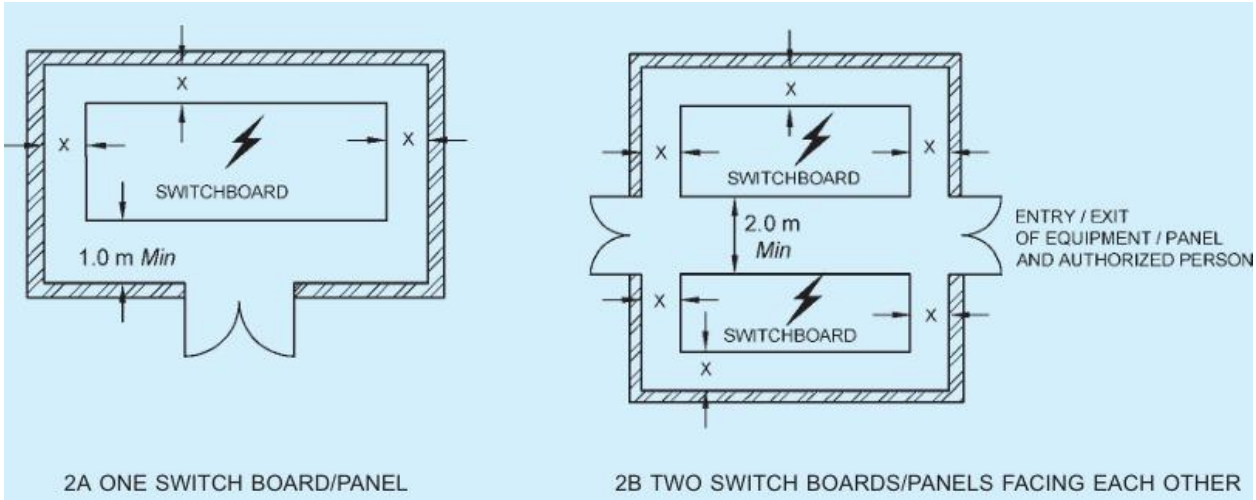

2A ONE SWITCH BOARD/PANEL

2B TWO SWITCH BOARDS/PANELS FACING EACH OTHER

X = Less than 200 mm (if switchboard/panel is not accessible from behind)

= More than 750 mm (if switchboard/panel is accessible from behind)

NOTE — X to be measured from the fathest protruding part of any attachment or conductor.

FIG. 2 CLEARANCES AROUND SWITCHBOARDS IN ENCLOSED ROOM

Sl No.	*Type of Circuit*	*Minimum Copper Wire Size*	*Number of Circuits*
(1)	(2)	(3)	(4)
i)	Lighting	1.5 mm^2	2 or more
ii)	Socket-outlets, 6 A	2.5 mm^2	Any number Areas such as kitchens and laundries 3 × double socket-outlets per circuit. Other areas up to 12 double socket-outlets
iii)	Signaling and control circuits	0.5 mm^2 (*see* Note 1)	—
iv)	Socket-outlets, 16 A	2.5 mm^2	1
v)	Water heater < 3 kW	2.5 mm^2	1
vi)	Heaters or electric equipment more than or equal to 3 kW	4.0 mm^2	1
vii)	Free standing electric range Separate oven and/or cook top	4.0 mm^2	1
viii)	Air conditioner > 1.5 t	4.0 mm^2	1
ix)	Permanently connected appliances including dishwashers, heaters, etc	2.5 mm^2	1 above 10 A. Up to 10 A can be wired as part of a socket-outlet circuit
x)	Appliance rated >3 kW<6 kW	6.0 mm^2	—
xi)	Submains to garage or out-building	2.5 mm^2	1 for each
xii)	Mains cable	—	It should be based on demand load/peaking loads and future loading.

NOTE — In multi-core flexible cables containing 7 or more cores and in signalling control circuits intended for electronic equipment a minimum nominal cross -sectional area of 0.1 mm^2 is permitted.

Sl No.	*Circuits*	*Minimum Wire Size*	*Wire Colour*
(1)	(2)	(3)	(4)
vii)	Cooking hobs	2 + E cable 1.5 mm^2	Red-Black-Green or Green/Yellow
viii)	Separate ovens	2 + E cable 4 mm^2 (stranded conductors)	
ix)	Electric range	2 + E cable 6 mm^2 (stranded conductors)	Red-Black- Green or Green/Yellow
x)	Mains	2 wire cable 16 mm^2 (stranded conductors)	Red-Black
xi)	Main equipotential bonding wire	Conduit wire 4 mm^2 (stranded conductors)	Green or Green/Yellow
xii)	Main earth wire	Conduit wire 6 mm^2 (stranded conductors)	Green or Green/Yellow

HVAC

Fundamental Requirements

The objective of installing air conditioning, heating and mechanical ventilation in buildings shall be to provide comfortable conditions without compromising on health and safety of occupants.

Air conditioning, heating and mechanical ventilation installation shall aim at controlling and optimizing the following factors in the building:

a) Air quality

b) Air movement,

c) Dry-bulb temperature,

d) Relative humidity,

e) Noise and vibration,

f) Energy efficiency, and g) Fire safety.

Equipment Room for Central Air Conditioning Plant

This room shall be located preferably within the building being air conditioned and closer to external wall for facilitating ventilation and equipment movement. The equipment may also be installed in a separate service block which should also be located as close as possible to the load/building being conditioned. The clear headroom below soffit of beam should be minimum 4.5 m for larger capacity chillers (500 TR and above) and minimum 3.6 m for smaller plants.

The floors of the equipment rooms should be finished smooth. For floor loading, the air conditioning engineer should be consulted (see also Part 6 ‘Structural Design, Section 1 Loads, Forces and Effects’ of the Code).

Table 3 Minimum Ventilation Rates in Breathing Zone (*See* Notes 1 to 5)
[*Clause* 6.2(c)(3)]

(This table is not valid in isolation; it shall be used in conjunction with the accompanying notes.)

Sl No.	Occupancy Category	People Outdoor Air Rate, R_p		Area Outdoor Air Rate, R_a		Notes	Default Values			Air[1] Class
							Occupant Density (*see* Note 4)	Combined Outdoor Air Rate (*see* Note 4)		
		cfm/ person	l/s. person	cfm/ ft²	l/s.m²		Persons per 1 000 ft² or per 100 m²	cfm/person	l/s.person	
(1)	(2)	(3)	(4)	(5)	(6)	(7)	(8)	(9)	(10)	(11)
i)	Correctional facilities:									
	a) Cell	5	2.5	0.12	0.6		25	10	4.9	2
	b) Dayroom	5	2.5	0.06	0.3		30	7	3.5	1
	c) Guard Stations	5	2.5	0.06	0.3		15	9	4.5	1
	d) Booking/waiting	7.5	3.8	0.06	0.3		50	9	4.4	2
ii)	Educational facilities:									
	a) Daycare (through age 4)	10	5	0.18	0.9		25	17	8.6	2
	b) Daycare sickroom	10	5	0.18	0.9		25	17	8.6	3
	c) Classrooms (ages 5-8)	10	5	0.12	0.6		25	15	7.4	1
	d) Classrooms (age 9 plus)	10	5	0.12	0.6		35	13	6.7	1
	e) Lecture classroom	7.5	3.8	0.06	0.3		65	8	4.3	1
	f) Lecture hall (fixed seats)	7.5	3.8	0.06	0.3		150	8	4.0	1
	g) Art classroom	10	5	0.18	0.9		20	19	9.5	2
	h) Science laboratories	10	5	0.18	0.9		25	17	8.6	2
	j) University/college laboratories	10	5	0.18	0.9		25	17	8.6	2
	k) Wood/metal shop	10	5	0.18	0.9		20	19	9.5	2
	m) Computer lab	10	5	0.12	0.6		25	15	7.4	1
	n) Media centre	10	5	0.12	0.6	*See* Note 6	25	15	7.4	1
	p) Music/theatre/dance	10	5	0.06	0.3		35	12	5.9	1
	q) Multi-use assembly	7.5	3.8	0.06	0.3		100	8	4.1	1
iii)	Food and beverage service:									
	a) Restaurant dining rooms	7.5	3.8	0.18	0.9		70	10	5.1	2
	b) Cafeteria/fast-food dining	7.5	3.8	0.18	0.9		100	9	4.7	2
	c) Bars, cocktail lounges	7.5	3.8	0.18	0.9		100	9	4.7	2
iv)	General:									
	a) Break rooms	5	2.5	0.06	0.3		25	10	5.1	1
	b) Coffee stations	5	2.5	0.06	0.3		20	11	5.5	1
	c) Conference/meeting	5	2.5	0.06	0.3		50	6	3.1	1
	d) Corridors	—	—	0.06	0.3		—	—	—	1
	e) Storage rooms	—	—	0.12	0.6	*See* Note 7	—	—	—	1
v)	Hotels, motels, resorts, dormitories:									
	a) Bedroom/living room	5	2.5	0.06	0.3		10	11	5.5	1
	b) Barracks sleeping areas	5	2.5	0.06	0.3		20	8	4.0	1
	c) Laundry rooms, central	5	2.5	0.12	0.6		10	17	8.5	2
	d) Laundry rooms within dwelling units	5	2.5	0.12	0.6		10	17	8.5	1
	e) Lobbies/prefunction	7.5	3.8	0.06	0.3		30	10	4.8	1
	f) Multipurpose assembly	5	2.5	0.06	0.3		120	6	2.8	1
vi)	Office buildings:									
	a) Office space	5	2.5	0.06	0.3		5	17	8.5	1
	b) Reception Areas	5	2.5	0.06	0.3		30	7	3.5	1
	c) Telephone/data entry	5	2.5	0.06	0.3		60	6	3.0	1
	d) Main entry lobbies	5	2.5	0.06	0.3		10	11	5.5	1
vii)	Miscellaneous spaces:									
	a) Bank vaults/safe deposit	5	2.5	0.06	0.3		5	17	8.5	2
	b) Computer (not printing)	5	2.5	0.06	0.3		4	20	10.0	1
	c) Electrical equipment rooms	—	—	0.06	0.3	*See* Note 7	—	—	—	1
	d) Elevator machine rooms	—	—	0.12	0.6	*See* Note 7	—	—	—	1
	e) Pharmacy (preparation area)	5	2.5	0.18	0.9		10	23	11.5	2
	f) Photo studios	5	2.5	0.12	0.6		10	17	8.5	1
	g) Shipping/receiving	—	—	0.12	0.6	*See* Note 7	—	—	—	1
	h) Telephone closets	—	—	0.00	0.0		—	—	—	1
	j) Transportation waiting	7.5	3.8	0.06	0.3		100	8	4.1	1
	k) Warehouses	—	—	0.06	0.3	*See* Note 7	—	—	—	2

Table 3 — (*Concluded*)

(1)	(2)	(3)	(4)	(5)	(6)	(7)	(8)	(9)	(10)	(11)
viii)	Public assembly spaces:									
	a) Auditorium seating area	5	2.5	0.06	0.3		150	5	2.7	1
	b) Places of religious worship	5	2.5	0.06	0.3		120	6	2.8	1
	c) Courtrooms	5	2.5	0.06	0.3		70	6	2.9	1
	d) Legislative chambers	5	2.5	0.06	0.3		50	6	3.1	1
	e) Libraries	5	2.5	0.12	0.6		10	17	8.5	1
	f) Lobbies	5	2.5	0.06	0.3		150	5	2.7	1
	g) Museums (children's)	7.5	3.8	0.12	0.6		40	11	5.3	1
	h) Museums/galleries	7.5	3.8	0.06	0.3		40	9	4.6	1
ix)	Residential:									
	a) Dwelling unit	5	2.5	0.06	0.3	*See* Notes 8 and 9	*See* Note 8	—	—	1
	b) Common corridors	—	—	0.06	0.3	—	—	—	—	1
x)	Retail:									
	a) Sales (except as below)	7.5	3.8	0.12	0.6		15	16	7.8	2
	b) Mall common areas	7.5	3.8	0.06	0.3		40	9	4.6	1
	c) Barbershop	7.5	3.8	0.06	0.3		25	10	5.0	2
	d) Beauty and nail salons	20	10	0.12	0.6		25	25	12.4	2
	e) Pet shops (animal areas)	7.5	3.8	0.18	0.9		10	26	12.8	2
	f) Supermarket	7.5	3.8	0.06	0.3		8	15	7.6	1
	g) Coin-operated laundries	7.5	3.8	0.06	0.3		20	11	5.3	2
xi)	Sports and entertainment:									
	a) Sports arena (play area)	—	—	0.30	1.5	*See* Note 10	—	—	—	1
	b) Gym, stadium (play area)	—	—	0.30	1.5		30	—	—	2
	c) Spectator areas	7.5	3.8	0.06	0.3		150	8	4.0	1
	d) Swimming (pool and deck)	—	—	0.48	2.4	*See* Note 11	—	—	—	2
	e) Disco/dance floors	20	10	0.06	0.3		100	21	10.3	1
	f) Health club/aerobics room	20	10	0.06	0.3		40	22	10.8	2
	g) Health club/weight rooms	20	10	0.06	0.3		10	26	13.0	2
	h) Bowling alley (seating)	10	5	0.12	0.6		40	13	6.5	1
	j) Gambling casinos	7.5	3.8	0.18	0.9		120	9	4.6	1
	k) Game arcades	7.5	3.8	0.18	0.9		20	17	8.3	1
	m) Stages, studios	10	5	0.06	0.3	*See* Note 12	70	11	5.4	1

Table 4 Outdoor Air Requirements for Ventilation of Health Care Facilities

[*Clause* 6.2(c)(3)]

Sl No.	Application	Estimated Maximum Occupancy[1)] Persons/100 m²	Outdoor Air Requirements		Remarks
			l/s per Person	l/s per m²	
(1)	(2)	(3)	(4)	(5)	(6)
i)	Patient rooms	10	13	—	Special requirements and pressure relationships may determine minimum ventilation rates and filter efficiency. Procedures generating contaminants may require higher rates
ii)	Medical procedure	20	8	—	
iii)	Operating rooms	20	15	—	
iv)	Recovery and ICU	20	8	—	
v)	Autopsy rooms	20	—	2.5	Air shall not be recirculated into other spaces
vi)	Physical therapy	20	8	—	

[1)] Net occupiable space.

DESIGN CONSIDERATIONS

System Analysis and Selection

System selection for occupant comfort, for space cooling, heating and ventilation, shall be based on the following criteria:

1) Temperature and its acceptable variation,

2) Humidity and its acceptable variation,

3) Air movement,

4) Air purity or quality,

5) Air changes per hour,

6) Air and/or water velocity requirements,

7) Local climate,

8) Space pressure requirements,

9) Capacity requirements as per load calculation analysis,

10) Redundancy,

11) Spatial requirements,

12) Fire safety and security concerns,

13) Initial cost,

14) Operating cost, including energy and power costs,

15) Maintenance cost,

16) Reliability,

17) Flexibility,

18) Controllability,

19) Life-cycle analysis,

20) Sustainability characteristics,

21) Acoustics and vibration,

22) Mold and mildew prevention.

Table 6 Guidelines for Parameters to be Considered for HVAC System Design for Health Care Facilities
(*Clause* 8.1.1)

Sl No.	Area/Functional Space	Temperature °C	Relative Humidity Percent	Minimum Total Air Changes per Hour	Minimum Air Changes of Outdoor Air per Hour	Air Pressure in Relation to Surrounding Area
(1)	(2)	(3)	(4)	(5)	(6)	(7)
i)	Operating theatres	18-24	45-55	25	5	Positive
ii)	Cath labs	20-22	30-60	15	3	Positive
iii)	Delivery rooms	20-22	30-60	25	5	Positive
iv)	Recovery room, ICU, Treatment rooms	20-24	30-60	6	2	Equal
v)	Endoscopy, Bronchoscopy	20-24	30-60	12	2	Negative
vi)	Patient rooms	24±1	30-60	6	2	Equal
vii)	Toilets	—	—	—	10	Negative
viii)	Protective environment rooms (Immuno suppressed patients)	24±1	30-60	12	2	Positive
ix)	Isolation room (for patients with infectious disease)	24±1	30-60	12	2	Negative
x)	Corridors	—	—	2	2	Negative
xi)	X-ray/Radiology	20-24	30-60	15	3	Positive
xii)	Laboratories (Other than biochemistry and serology)	22-24	30-60	6	2	Negative
xiii)	Biochemistry and serology labs and pharmacy	22-24	30-60	6	2	Positive
xiv)	Admission/Waiting rooms	22-24	30-60	6	2	Negative
xv)	Diagnostic/Treatment OPD	22-24	30-60	12	2	Negative
xvi)	Sterilizer room	22-26	30-60	10	—	Negative
xvii)	Sterilizer storage	22-26	30-50	4	2	Positive

Table 7 Guidelines for Filter Efficiency Requirement in Health Care Facilities
(*Clause* 8.1.1)

Sl No.	Category	Area/Designation	Filter Efficiency	
			Filter Bed 1	Filter Bed 2
(1)	(2)	(3)	(4)	(5)
i)	Category 1	a) Orthopaedic OT b) Bone marrow transplant OT c) Organ transplant OT	3 to 10 micron particles 70 percent efficiency	0.3 to 1 micron particles 95 percent efficiency (HEPA at outlets)
ii)	Category 2	a) General OT delivery rooms b) ICU, patient care rooms c) Treatment rooms d) Diagnostic areas	3 to 10 micron particles 70 percent efficiency	0.3 to 1 micron particles 85 percent efficiency
iii)	Category 3	a) Laboratories b) Sterile storage	0.3 to 1 micron particles 75 percent efficiency	Not required
iv)	Category 4	a) Food preparation b) Laundry c) Admin, etc	3 to 10 micron particles 70 percent efficiency	Not required

Table 1 Water Requirements for Buildings Other than Residences
(*Clause* 4.1.2)

Sl No.	Type of Building	Domestic Per Day litre	Flushing Per Day litre	Total Consumption Per Day litre
(1)	(2)	(3)	(4)	(5)
i)	Factories including canteen where bath rooms are required to be provided	30 per head	15 per head	45 per head
ii)	Factories including canteen where no bath rooms are required to be provided	20 per head	10 per head	30 per head
iii)	Hospital (excluding laundry and kitchen) (*see* Note 2):			
	a) Number of beds not exceeding 100	230 per head	110 per head	340 per head
	b) Number of beds exceeding 100	300 per head	150 per head	450 per head
	c) Out patient department (OPD)	10 per head	5 per head	15 per head
iv)	Nurses' homes and medical quarters	90 per head	45 per head	135 per head
v)	Hostels	90 per head	45 per head	135 per head

4.7.3.3 The maximum flow rate and flush volumes shall be as given below:

Plumbing Fixtures/Fittings	*Maximum Flow Rate*
Water closets	6 litre/flush
Urinals	3.8 litre/flush
Lavatory, metered faucet (Public)	1 litre/use
Lavatory, faucet (Private)	8 litre/min
Sink, faucet	8 litre/min
Bidet, hand held spray	8 litre/min
Shower head	10 litre/min

4.8 Distribution Systems in Multi-Storeyed Buildings

4.8.1 There are following four basic methods of distribution of water to a multi-storeyed buildings:

a) Direct supply system from mains — public or private.

b) Gravity distribution system.

c) Pressurized distribution system (Hydro-pneumatic pumping system).

d) Combined distribution system.

Table 5 Hospitals with Indoor Patient Wards

(*Clause* 4.2.5.1)

Sl No.	Fixtures	Patient Toilets		Staff Toilets	
		Males	Females	Males	Females
(1)	(2)	(3)	(4)	(5)	(6)
i)	Toilet suite comprising one WC and one wash basin and shower stall	Private room with up to 4 patients		For individual doctor's/officer's rooms	
	For General Wards, Hospital Staff and Visitors				
ii)	Water closets	1 per 5 beds or part thereof	1 per 5 beds or part thereof	1 for up to 15 2 for 16 to 35	1 for up to 12 2 for 13 to 25
iii)	Ablution tap	One in each water closet	One in each water closet	One in each water closet	One in each water closet
	1 water tap with draining arrangements shall be provided for every 50 persons or part thereof in the vicinity of water closets and urinals				
iv)	Urinals	1 per 15 beds	—	Nil up to 6 1 for 7 to 20 2 for 21 to 45	—
v)	Wash basins	2 for every 30 beds or part thereof. Add 1 per additional 30 beds or part thereof		1 for up to 15 2 for 16 to 35	1 for up to 12 2 for 13 to 25
vi)	Drinking water fountain	1 per ward		1 per 100 persons or part thereof	
vii)	Cleaner's sink	1 per ward		—	
viii)	Bed pan sink	1 per ward		—	
ix)	Kitchen sink	1 per ward		—	

Table 6 Hospitals with Outdoor Patient Department

(*Clause* 4.2.5.1)

Sl No.	Fixtures	Patient Toilets		Staff Toilets	
		Males	Females	Males	Females
(1)	(2)	(3)	(4)	(5)	(6)
i)	Toilet suite comprising one WC and one wash basin (with optional shower stall if building used for 24 h)	For up to 4 patients		For individual doctor's/officer's rooms	
ii)	Water closets	1 per 100 persons or part thereof	2 per 100 persons or part thereof	1 for up to 15 2 for 16 to 35	1 for up to 12 2 for 13 to 25
iii)	Ablution tap	One in each water closet	One in each water closet	One in each water closet	One in each water closet
	1 water tap with draining arrangements shall be provided for every 50 persons or part thereof in the vicinity of water closets and urinals				
iv)	Urinals	1 per 50 persons or part thereof	—	Nil up to 6 1 for 7 to 20 2 for 21 to 45	—
v)	Wash basins	2 per 100 persons of part thereof	2 per 100 persons or part thereof	1 for up to 15 2 for 16 to 35	1 for up to 12 2 for 13 to 25
vi)	Drinking water fountain	*See* Note 2		1 per 100 persons or part thereof	

Table 7 Hospitals, Administrative Buildings

(*Clause* 4.2.5.1)

Sl No.	Fixtures	Staff Toilets	
		Males	Females
(1)	(2)	(3)	(4)
i)	Toilet suite comprising one WC, one urinal and one wash basin (with optional shower stall if building used for 24 h)	For individual doctor's/officer's rooms	
ii)	Water closets	1 per 25 persons or part thereof	1 per 15 persons or part thereof
iii)	Ablution tap	One in each water closet 1 water tap with draining arrangements shall be provided for every 50 persons or part thereof in the vicinity of water closets and urinals	One in each water closet
iv)	Urinals	1 for 6 to 15 2 for 16 to 50	—
v)	Wash basins	1 per 25 persons or part thereof	1 per 25 persons or part thereof
vi)	Drinking water fountain	1 per 100 persons or part thereof (*See* Note 2)	
vii)	Cleaner's sink	1 per floor, *Min*	
viii)	Kitchen sink	1 per floor, *Min*	

NOTES

1 Some WCs may be Indian style, if desired.

2 Drinking water fountains to be provided only when it is a separate block and patients will not use it.

Table 8 Hospitals Staff Quarters and Nurses Homes

(*Clause* 4.2.5.1)

Sl No.	Fixtures	Staff Quarters		Nurses Homes	
		Males	Females	Males	Females
(1)	(2)	(3)	(4)	(5)	(6)
i)	Water closets	1 per 4 persons or part thereof	1 per 4 persons or part thereof	1 per 4 persons or part thereof 2 for 5 to 35	1 per 4 persons or part thereof 2 for 5 to 25
ii)	Ablution tap	One in each water closet	One in each water closet	One in each water closet	One in each water closet
		1 water tap with draining arrangements shall be provided for every 50 persons or part thereof in the vicinity of water closets and urinals			
iii)	Wash basins	1 per 8 persons or part thereof		1 per 8 persons or part thereof	
iv)	Bath (showers)	1 per 4 persons or part thereof		1 per 4 to 6 persons or part thereof	
v)	Drinking water fountain	1 per 100 persons or part thereof, *Min* 1 per floor		1 per 100 persons or part thereof, *Min* 1 per floor	
vi)	Cleaner's sink	1 per Floor		1 per Floor	

NOTES

1 Some WCs may be Indian style, if desired.

2 For independent housing units, fixtures shall be provided as for residences.

Table 19 Fixture Unit Values for Fixtures Based on Fixture Drain on Trap Size
(*Clause* 4.5.3.5.1)

Sl No.	Fixture Drain on Trap Size	Fixture Unit Value
(1)	(2)	(3)
i)	32 mm and smaller	1
ii)	40 mm	2
iii)	50 mm	3
iv)	65 mm	4
v)	80 mm	5
vi)	100 mm	6

RAIN WATER HARVESTING

Table 24 Rainwater Available from Roof Top Harvesting
(*Clause* 4.5.12.3.1)

Rain fall mm → / Roof Top Area m^2 ↓	100	200	300	400	500	600	700	800	900	1 000	1 100	1 200	1 300	1 400	1 500	1 600	1 700	1 800	1 900	2 000
	Harvested Water from Roof Tops, m^3 (80 percent of gross precipitation)																			
(1)	(2)	(3)	(4)	(5)	(6)	(7)	(8)	(9)	(10)	(11)	(12)	(13)	(14)	(15)	(16)	(17)	(18)	(19)	(20)	(21)
20	2	3	5	6	8	10	11	13	14	16	18	19	21	22	24	26	27	29	30	32
30	2	5	7	10	12	14	17	19	22	24	26	29	31	34	36	38	41	43	46	48
40	3	6	10	13	16	19	22	26	29	32	35	38	42	45	48	51	54	58	61	64
50	4	8	12	16	20	24	28	32	36	40	44	48	52	56	60	64	68	72	76	80
60	5	10	14	19	24	29	34	38	43	48	53	58	62	67	72	77	82	86	91	96
70	6	11	17	22	28	34	39	45	50	56	62	67	73	78	84	90	95	101	106	112
80	6	13	19	26	32	38	45	51	58	64	70	77	83	90	96	102	109	115	122	128
90	7	14	22	29	36	43	50	58	65	72	79	86	94	101	108	115	122	130	137	144
100	8	16	24	32	40	48	56	64	72	80	88	96	104	112	120	128	136	144	152	160
110	9	18	26	35	44	53	62	70	79	88	97	106	114	123	132	141	150	158	167	176
120	10	19	29	38	48	58	67	77	86	96	106	115	125	134	144	154	163	173	182	192
130	10	21	31	42	52	62	73	83	94	104	114	125	135	146	156	166	177	187	198	208
140	11	22	34	45	56	67	78	90	101	112	123	134	146	157	168	179	190	202	213	224
150	12	24	36	48	60	72	84	96	108	120	132	144	156	168	180	192	204	216	228	240
200	16	32	48	64	80	96	112	128	144	160	176	192	208	224	240	256	272	288	304	320
250	20	40	60	80	100	120	140	160	180	200	220	240	260	280	300	320	340	360	380	400
300	24	48	72	96	120	144	168	192	216	240	264	288	312	336	360	384	408	432	456	480
400	32	64	96	128	160	192	224	256	288	320	352	384	416	448	480	512	544	576	608	640
500	40	80	120	160	200	240	280	320	360	400	440	480	520	560	600	640	680	720	760	800
1 000	80	160	240	320	400	480	560	640	720	800	880	960	1 040	1 120	1 200	1 280	1 360	1 440	1 520	1 600
2 000	160	320	480	640	800	960	1 120	1 280	1 440	1 600	1 760	1 920	2 080	2 240	2 400	2 560	2 720	2 880	3 040	3 200
3 000	240	480	720	960	1 200	1 440	1 680	1 920	2 160	2 400	2 640	2 880	3 120	3 360	3 600	3 840	4 080	4 320	4 560	4 800

SEWAGE TREATMENT

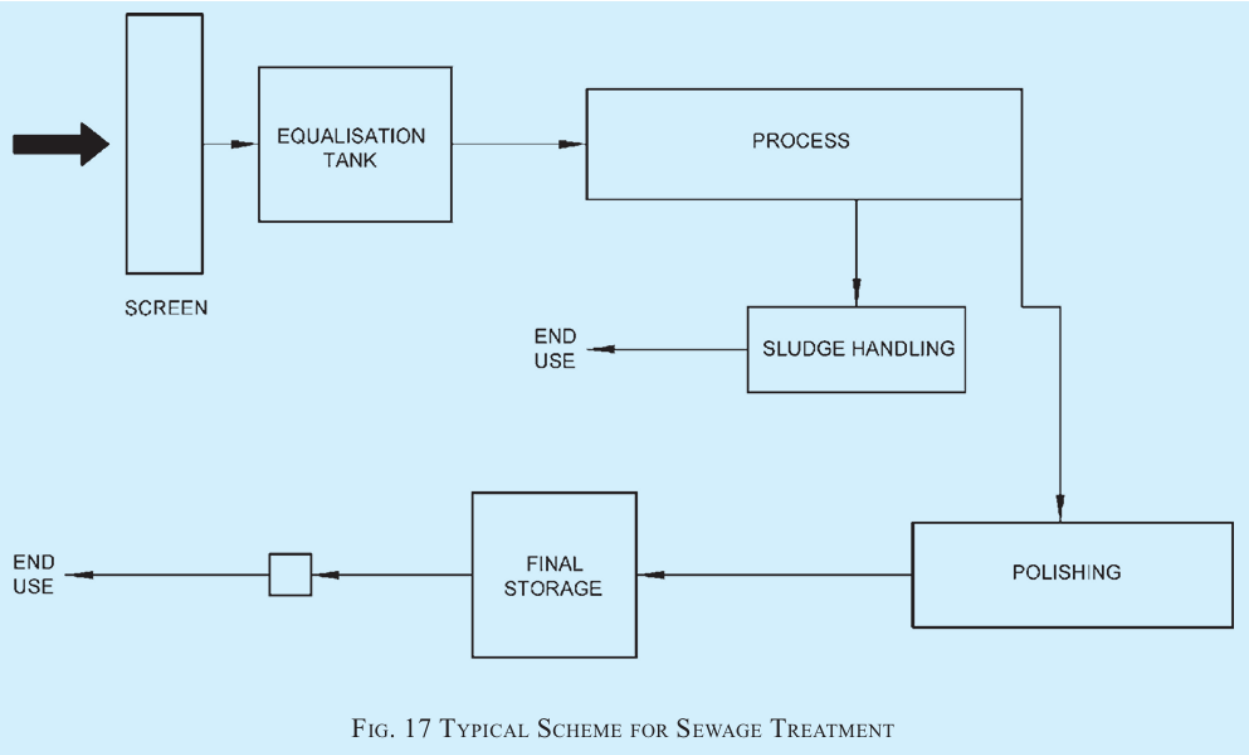

FIG. 17 TYPICAL SCHEME FOR SEWAGE TREATMENT

PHC

IPHS GUIDELINES-2022

Infrastructure

The HWC-PHC should be located such that they are easily accessible by the rural community which they plan to serve. The UHWC-PHC should also be located such that under-served population in urban slums in cities and peri urban areas can access the services. Similar to rural areas, where sub-centres are functional under PHCs, Urban Health and Wellness Centres (UHWCs) are functional under UPHCs. These UHWCs should preferably be located within 1 k.m. radius from the periphery of underserved population of urban slum, vulnerable pockets, and temporary settlements, which the National Urban Health Mission intends to serve. The multispecialty polyclinic should be centrally located for easy access from all UPHCs and UHWCs. The existing UPHC should be augmented with adequate space/rooms for specialist consultation and other services, for strengthening it as multispecialty UPHC or Polyclinic. At times, the availability of land is a challenge, so the possibility of vertical expansion can be considered. However, for a facility (PHC/UPHC) to be IPHS compliant, sufficient space along with essential services as prescribed in these guidelines should be provisioned for. The infrastructure for PHCs/UPHCs and multispecialty polyclinics should follow the rules and regulations as laid down in the state by-laws and the National Building Code Infrastructure planning of a PHC, 24x7 PHCs/24x7 UPHC and UPHC

should ideally be as per the standard layout plan. ***(Annexure 3a, 3b and 3c)*** Layout for 24x7 UPHCs will be same as of the 24x7 PHC. ***(Annexure 3b)*** For already existing facilities, the flow of services needs to be ensured as per the standard plan and if required, additional infrastructure can be created, or existing structures modified to meet the deficiencies. Old and dilapidated facilities may need to be demolished to build new infrastructure. However, while demolishing any old building, it should be ensured that alternate arrangements are made for effective and continued provision of the existing services. Factors to be considered while building a new facility or selecting a new site for a facility include:

- Accessibility to the community (with good road connectivity).
- Ensuring the facility is not in a flood prone area.
- Ensuring it is adequately serviced by public utilities such as water, electricity and telephone
  connectivity, sewage, and storm-water disposal.
- Ensuring elderly and disabled friendly access including visual and physical disability.
- Minimizing exposure to air, noise, water and land pollution and vector-breeding and ingress proof buildings.
- Reviewing land utilization in adjoining areas, obtaining the necessary environmental (including
  seismic safety), fire safety and administrative clearance.
- The state and area specific by-laws and rules should be strictly adhered to.

The foundation of the health facility infrastructure should be strong enough to meet the requirement of the seismic zones of that area and also for any future expansion. It should strictly adhere to the statutory fire safety norms. An open area to facilitate the management of disasters and emergencies is also recommended.
Location of PHC to be constructed should be decided through a consultative process involving community, gram panchayat/ULB members, community forest rights committees, BMO/DMO and others. Construction of the new building in rural areas should preferably be undertaken in a central location with high population density and not in the peripheral areas of the villages.

Emphasis should be given to create a positive, client friendly ambience and environment around the facility with space/room for yoga and other wellness activities. This includes due consideration to the provision of facilities for uninterrupted electricity supply, patient registration, waiting areas, clear wayfinding and signposting, parking, gardens, washrooms, drinking water and disable-friendly facilities. Processes such as registration and drug dispensing should be computerized with electronically supported queue systems in all service areas. The facility should be environment friendly with scope for adequate natural light, water harvesting and solar energy, if appropriate along with adequate Biomedical waste management and drainage. There should be enough storage space for medicines, equipment, documents, health records and registers. All infrastructure should be climate, environmental change and disaster resilient.Infrastructural requirements for certain support services are common for all facilities. General principles to bear in mind are presented here:

General Appearance and Upkeep

The facility should have a high boundary wall. Adequate lighting should be ensured so that the facility is clearly visible from the approach road. There should be no encroachment in

and around the facility. It should be plastered and painted in a uniform colour scheme and free from seepage, cracks, and broken windowpanes. There should be no unwanted/outdated posters or hoardings on the walls of building and the boundary wall of the facility. The floors should be anti-skid and non-slippery. Branding as per GoI norms should be completed for HWC-PHCs.

Way-finding/Signage

Adequate and clear signage should be displayed on the main and connecting roads to the facility. They should be in a font which is easily visible from a distance. A board clearly indicating the name of the facility, should be placed at the front of the facility (including in English, Hindi and local language, if any). The layout of the facility should be displayed near the entrance. Safety, hazard and caution signs should be prominently displayed at relevant places. A fire exit plan with fluorescent signage should be placed where appropriate. Tactile pathways should be placed for visually incapacitated visitors.

Important information such as contact numbers (e.g., fire, police, ambulance, blood banks and referral centres) must be clearly displayed.

Parking

Facilities for parking commensurate to the estimated vehicle load (patients, staff, fringe) should be part of the infrastructure plan with ample access for vehicles and ambulances.

Garden and green areas
Gardens, other green areas and open spaces give a positive, healing environment that reduces stress, anxiety and mental fatigue. Thus, wherever possible, identify and promote greenery and open spaces. Herbal gardens should be promoted in the campus of the health facility.

Environment friendly features

The facility should be environment friendly and energy efficient. Where possible, the use of rainwater harvesting, solar energy and energy-efficient bulbs/equipment should be encouraged.
While constructing the facility building, the effect of sun, rain, wind, soil, and other climatic factors which could have an adverse effect on the building needs to be considered, e.g., dampness and seepage can lead to spoilage of medicines in the drug store.

Disabled and elderly friendly access

For easy access of non-ambulant (wheelchair, stretcher), semi-ambulant, physically, and visually disabled and elderly people, infrastructure norms in line with the ‘Guidelines and Space Standards for barrier-free built environment for Disabled and Elderly Persons’ of the Government of India should be followed. Provisions of the ‘Persons with Disability Act, 2016’ should be implemented. Those facilities that lack such amenities must plan and retrofit them in the facilities.
In order to support the needs of visually disabled visitors, it is also advised that tactile signs should be installed with a good contrast between letters and background. It is recommended to install one/two rows of tactile guiding blocks along the entire length of the accessible

route. Care should be taken to ensure that there are no obstacles, such as trees, poles, or uneven surfaces, along the route traversed by the guiding blocks.

Circulation areas, corridors, and ramps

The flooring of circulation areas such as corridors, ramps, staircases, and other common spaces should be anti-skid and non-slippery. Patient & service lifts are preferred over ramps for buildings with vertical expansion. Ramps for patient movements from one floor to other are space occupying and costly whereas lifts can operate efficiently with little space. However if lifts are installed, alternative source of power needs to be ensured with maintenance facility for the lifts. The size of corridors, ramps, and stairs should be conducive for maneuverability of wheeled equipment. Ramps shall have a slope of 1:15 to 1:18 and should be checked for maneuverability.

Disaster and emergency preparedness

All health care facilities should be resilient to climatic and environmental changes. They should also be able to handle sudden healthcare needs during disasters and unforeseen emergencies/epidemics/pandemics etc. While creating infrastructure seismicity of zones needs to be considered. Wherever the health facilities are already existing possible retrofitting should be planned.

Healthcare facilities shall be inspected by competent licensed engineers after every damaging earthquake to document damages (if any) to Structural Element (SEs) and Non-Structural Element (NSEs) of the buildings, along with recommendations for detailed study and suitable retrofitting as found necessary.

Detailed norms for disaster preparedness and safe electricity are placed at Annexure 4.

All staff should be trained on relevant disaster prevention and management procedures along with climate and environment resilient features. Structural and non- structural earthquake proof measures (in line with the State Govt. guidelines) should be incorporated. These include simple non-structural measures like fastening of shelves, almirahs and movable equipment, etc., as appropriate. Similarly, in flood prone areas, structural provisions like raised floor, sloping RCC roof for quick rainwater drainage, etc. should be factored in.

Fire safety

Compliance as per state and central government guidelines for fire regulations should be ensured while planning for a PHC/UPHC. Availability of open spaces, clearly visible fire exits with proper illumination and lighting (even during interruption in electric supply) are some of the important considerations for creating fire safe infrastructure.

As a principle, none of the fire exit doors should be kept locked. These doors should be fire resistant and can be opened towards outside with a push bar system on the doors. Fire detectors, extinguishers, sprinklers, and water connections should be functional and easily accessible. Periodic monitoring and audit for fire safety and drills should be organized and conducted. All healthcare facilities should be so designed, constructed, maintained, and operated as to minimize the possibility of a Fire emergency requiring the evacuation of occupants. Safety of hospital occupants cannot be assured adequately by depending on

evacuation alone. Hence measures should be taken to limit the development and spread of a fire by providing appropriate arrangements within the hospital through adequate staffing & careful development of operative and maintenance procedures consisting of:

- Design and Construction.
- Provision of Detection, Alarm and Fire Extinguishment.
- Fire Prevention
- Planning and Training programs for Isolation of Fire; and,
- Transfer of occupants to a place of comparative safety or evacuation of the occupants to achieve ultimate safety

Electric power supply

The public health facilities should have access to adequate, affordable, continuous and reliable electricity supply. Distribution of electric load along with load balancing to various equipment and installations in a facility is very important since overloading at any point can result in mishap like electric fire hazard or can damage the equipment. Similarly, fluctuation in voltage also adversely affects the equipment and hence automatic voltage regulators which regulate fluctuating input power voltage and maintain constant output voltage should be provided. Electrical installation is a specialized job and must be given due importance to ensure reduced risks to the patient. Adequate no. of electric points on various walls (at < 1.5 m height from the floor) needs to be ensured for easy connection. Use of explosion proof plugs, plug connector and socket is essential to ensure safety against explosion. There should be a constant digital display for neutral and earthing. The voltage between neutral and earthing should not be more than 5 volts otherwise it can harm the semiconductor devices. Hence, digital display should be installed to monitor the voltage between neutral and earthing.

New electrical appliances should ideally have a 5-star or minimum 3-star rating from Bureau of Energy Efficiency or equivalent recognized organization to minimize the energy input. Use of low-energy LED lighting or alternate low-energy option to save indoor lighting energy is recommended. While designing the infrastructure, placing of important equipment particularly those requiring power supply needs to be decided to avoid haphazard supply which may lead to malfunctioning of equipment. Appropriate power backup/inverter should be in place to ensure that there is no disruption of services and cold chain for vaccine and diagnostics is properly maintained. Appropriate power backup/inverter should be in place to ensure that there is no disruption of services, and cold chain for vaccine and diagnostics is properly maintained. Two nos. of earthing should be there at each electrical installation. Copper plate earthing should be preferred.

The size of cabling and wiring should be about 1.5 times or more to the actual electrical load calculated. Adequate power back up with other sources such as DG, Photovoltaic etc. should be there in synchronization with the first source. Phase sequence should be proper as for motorized load. Health facilities have a lot of motorized as well as semiconductor material devices, hence, provision of power factor improvement should be made available. All the connections and joints should be tight with proper size of thimbling. Suitable place should be selected for electrical installation. The Electrical Switch Room should be housed in a dedicated room/cupboard located on the ground floor and in association with an external wall. It should have internal access. The room should be located in a manner that it does not present difficulties for services distribution from adjoining spaces or rooms. It should be located to provide for economic distribution of services. The main switchboard should ideally

be of metal clad cubicle design to approved standards and regulations. Each switchgear assembly should have sufficient spare capacity. Electronic surge protection should be provided on the incoming mains. Periodic electrical audits by engineers should take place.

Illumination

The illumination and lighting at the PHC/UPHC should be according to the prescribed standards. The minimum lux required in general OPD area is 150 lux. Wards, stairs, and corridors should have minimum 100 lux. Medicine store and Minor OT (if available) should have 300 lux. Emergency portable light units should be provided in the ward. These illumination requirements should be as prescribed by Bureau of Indian Standards (BIS).

Potable Water Supply

Arrangement should be made for round the clock piped water supply along with an overhead water storage tank with a provision to store at least 3 days water requirement. Adequate availability of potable water in various areas needs to be ensured. It should have pumping and boosting arrangements. Separate provision for firefighting should be made available.

Drainage and Sanitation

The construction and maintenance of drainage and sanitation system for wastewater, surface water, sub-soil water and sewerage should be in accordance with the prescribed standards. Reuse of wastewater in irrigation, cooking, cleaning and washing, etc. can be demonstrated in villages and urban slums for orientation of the community.

Waste Management

All such waste which can adversely harm the environment or health of a person is considered as infectious and termed as Bio-Medical Waste (BMW). Every health care facility should ensure appropriate collection, transportation, treatment, and disposal of bio-medical waste as per the latest Bio-Medical Waste Management Rules (BMWM). Each Healthcare facility should ensure that there is a designated central waste collection room situated within its premises for storage of bio-medical waste, till the waste is picked and transported for treatment and disposal at Common Bio-Medical Waste Treatment Facility. Such room should be under the responsibility of a designated person and should be under lock & key. It should also be ensured that disposal of human anatomical waste, soiled waste and biotechnology waste is done within 48 hours.

As per Biomedical waste management guidelines 2016, deep burial pits need to be constructed only at such PHCs where the common biomedical treatment plant is located at distance more than 75 kilometers. Before disposal of biomedical waste in the pits, the facility needs to ensure that biomedical waste is decontaminated and shredded. This will be carried out with prior approval from the prescribed authority and as per the Standards specified in Schedule-III.

General waste consists of all the waste other than bio-medical waste, which has not been in contact with any hazardous or infectious, chemical, or biological secretions and does not include any waste sharps. Such waste is required to be handled as per Solid Waste Management Rules and Construction & Demolition Waste Management Rules, as applicable.

Liquid waste management is another area which needs adequate attention for separate drainage system to ETP and for health care facilities the liquid waste and effluents can be treated in the area where it is generated, before disposal in drainage system.

Other waste consists of electronic equipment, used batteries, and radio-active wastes which is not covered under biomedical waste but have to be disposed as and when such waste is generated as per the provisions laid down under E-Waste (Management) Rules, Batteries (Management & Handling) Rules, and Rules/ Guidelines under the latest Atomic Energy Act, respectively.

NBC CHAPTER 3

A wheelchair has a footplate and leg rest attached in front of the seat. The footplate extends about 350 mm in front of the knee. The footplate may prevent wheelchair users from getting close enough to an object/site. Hence, at least 350 mm deep and 700 mm high space under a counter, stand, etc, shall be provided (see Fig. 13). STANDARDS | Health and Wellness Centre -

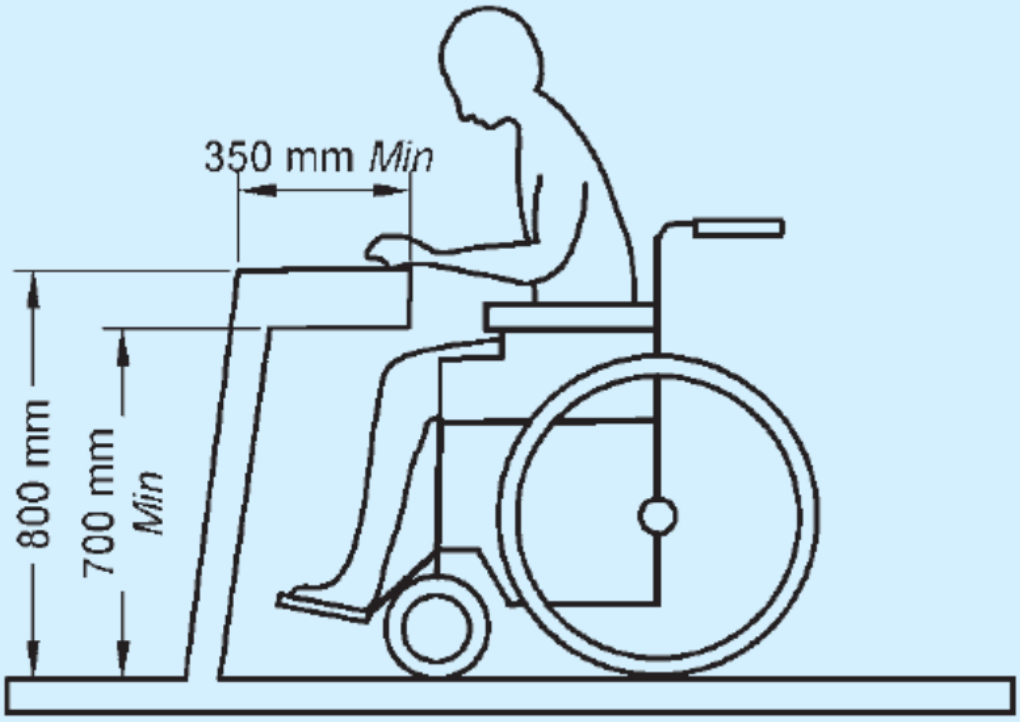

FIG. 13 NECESSARY SPACE UNDER COUNTER OR STAND FOR EASE OF WHEELCHAIR USERS

B-1.1.1.4 Clear floor space for wheelchair user The minimum clear floor or ground area required for accommodating a single, stationary wheel chair and occupant is 900 mm × 1 200 mm (see Fig. 14). Where transfer from the wheelchair is involved, the clear space should preferably be 900 mm × 1 350 mm.

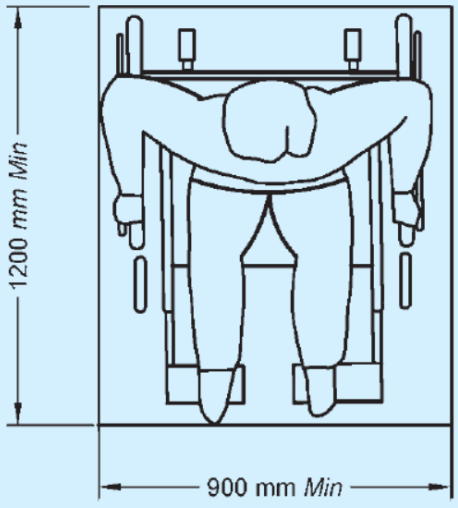

FIG. 14 CLEAR FLOOR SPACE

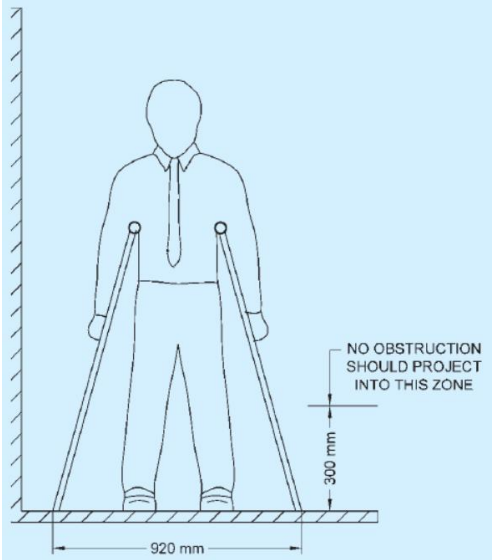

FIG. 16 PASSAGEWAY REQUIRED FOR PEOPLE WHO USES WALKING AIDS

B-1.1.1.5 Circulation dimensions The minimum clear floor ground area for a wheelchair to turn is 1 500 mm, whereas comfortable is 1 800 mm and it is ideal to provide 2 000 mm (see Fig. 15).

B-1.1.2 Space Allowance for Crutch Users Although people who use walking aids can manoeuvre through door openings of 900 mm clear width, they in Fig. 16. Crutch tips, often extend down out at a wide
angle, and are hazardous in narrow passageways where they might not be seen by other pedestrians.

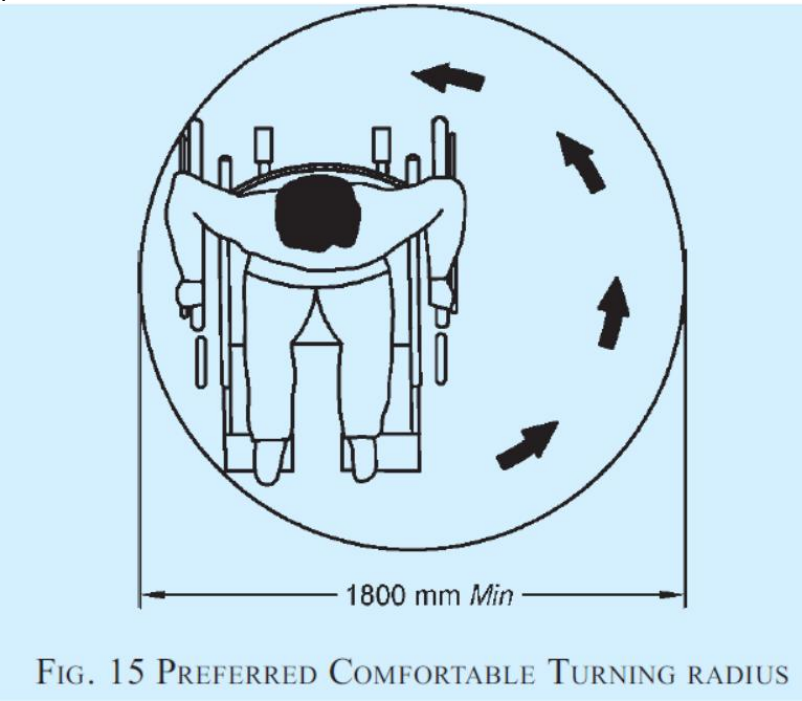

FIG. 15 PREFERRED COMFORTABLE TURNING RADIUS

Space Allowance for White Cane Users Following shall be ensured for white cane users:

a) Protruding objects, such as directional signs, tree branches, wires, guy ropes, public telephone booths, benches and ornamental fixtures shall be installed with consideration of the range of the white cane of a person with vision impairment.

b) A barrier to warn blind or visually impaired person shall be provided under stairways or escalators so that they don't accidently enterin to them.

c) Walkways, halls, corridors, passage ways, aisles, or other circulations spaces shall have clear headroom to minimize the risk of accidents.

d) Adequate space allowance should be made considering that the radial range of white cane is a band of 900 mm wide (see Fig. 17).

e) Any obstacle above 300 mm cannot be detected by the white cane. If there are projections above this height then the same has to be treated in accordance with B-2.6.2.

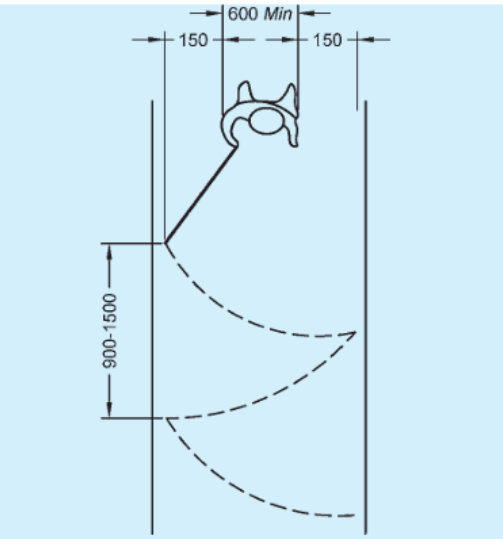

All dimensions in millimetres.

FIG. 17 SPACE ALLOWANCE (RADIAL RANGE) FOR PEOPLE USING WHITE CANES

Common Reach Zone

As part of the common reach zone, the comfortable reach zone when seated on a wheelchair is between 900 mm and 1 200 mm and the maximum reach zone is between 1 200 mm and 1 400 mm

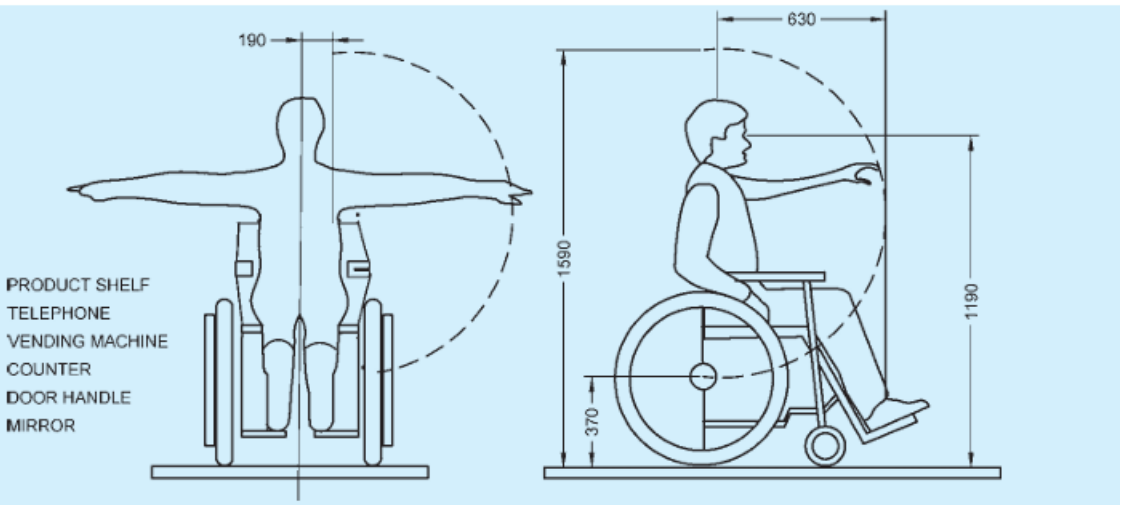

All dimensions in millimetres.

FIG. 18 RANGE OF REACH OF WHEELCHAIR USER

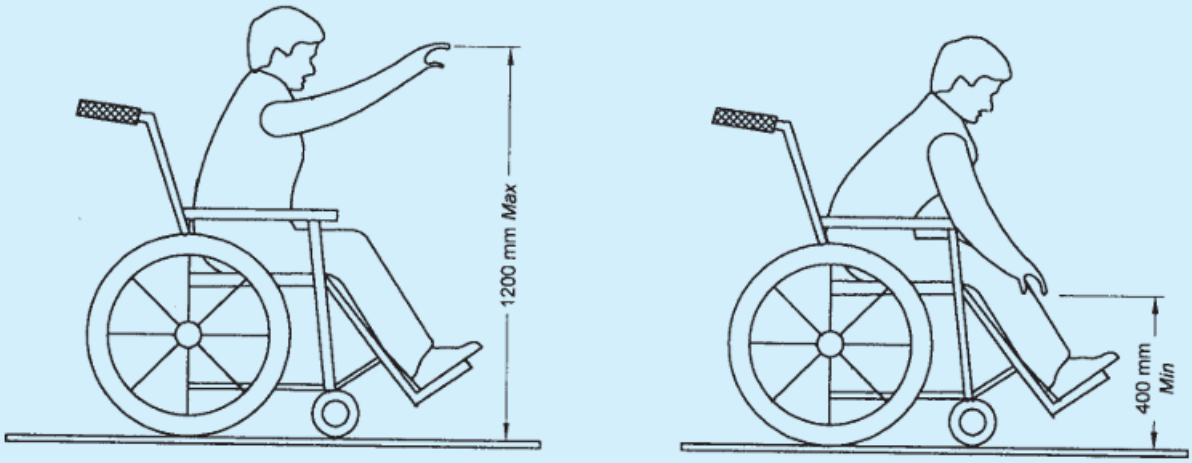

FIG. 19 FORWARD REACH WITHOUT OBSTRUCTION

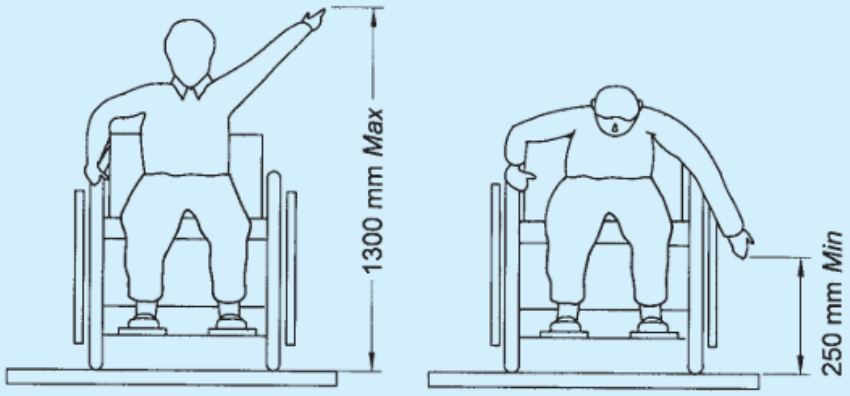

FIG. 21 SIDE REACH WITHOUT OBSTRUCTION

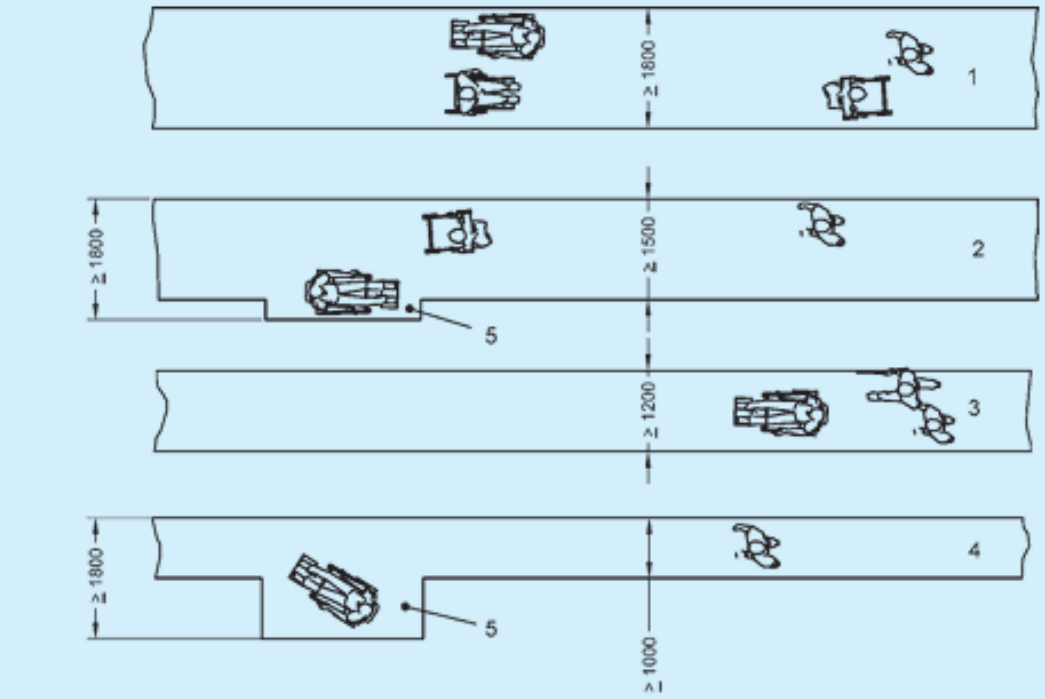

Key
1 and 2 For two-way traffic
3 and 4 For one-way traffic
5 Passing and turning space every 25 m (only acceptable for wheelchair users under exceptional circumstances)

All dimensions in millimetres.

FIG. 26 DIFFERENT SURFACE WIDTHS OF THE PATH DEPENDING ON TRAFFIC

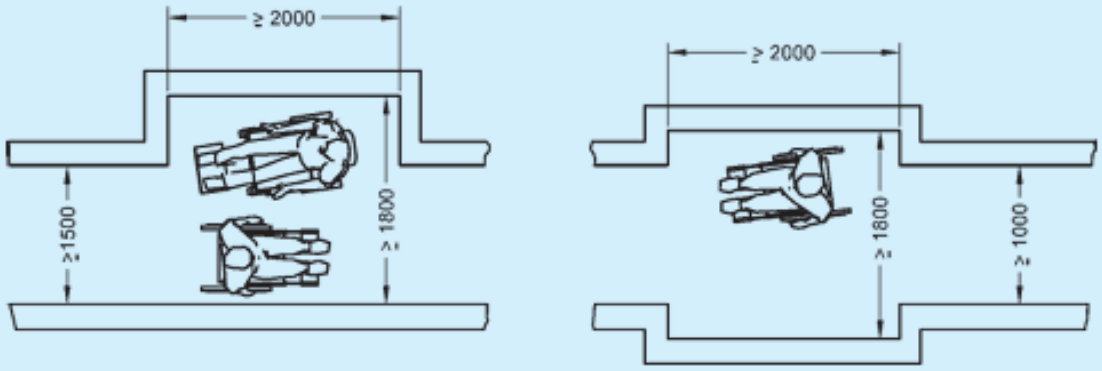

All dimensions in millimetres.

FIG. 27 EXAMPLES FOR PASSING PLACES FOR WHEELCHAIR USERS

The headroom along a path shall be maintained at a height of not less than 2 100 mm above the surface of the path. Any objects projecting more than 100 mm between 300 mm and 2 100 mm above ground level into an access route shall be clearly visible and detectable with a cane (see Fig. 34).

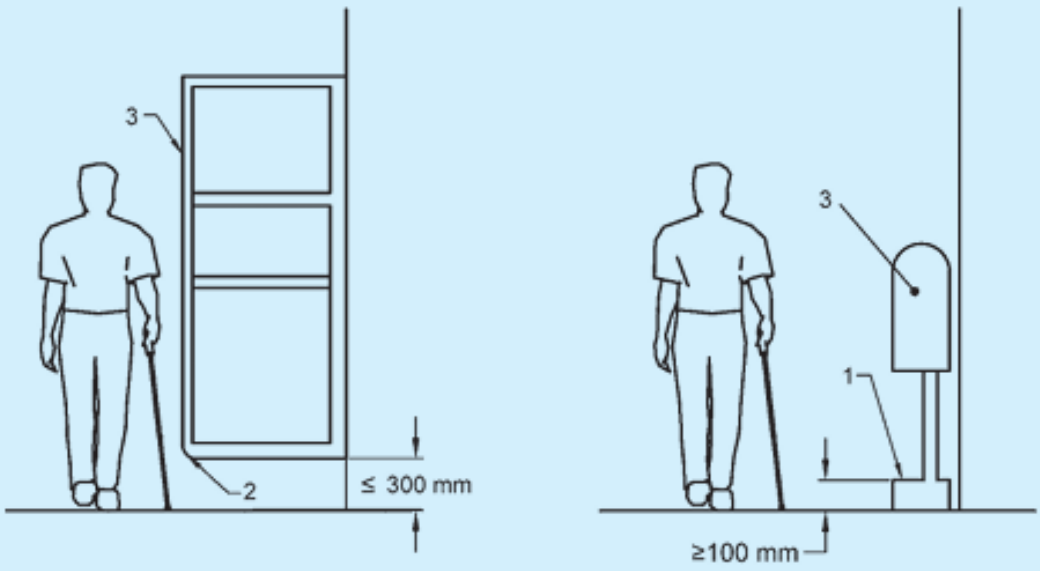

Key

1 Base plinth detectable with cane if a projecting object is more than 100 mm above floor level

2 Winged protection between 300 mm and 1 000 mm above floor level, contrasting visually with the background and detectable with a cane

3 Difference in light reflectance value to background – minimum 30 points

FIG. 34 SOLITARY OBSTACLES



FIG. 36 DIRECTIONAL SIGNAGE LEADING TO DESIGNATED ACCESSIBLE PARKING SPACES

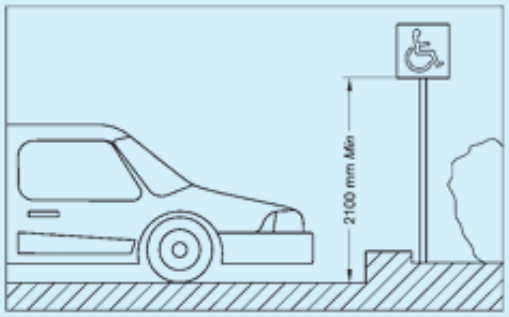

FIG. 37 VERTICAL SIGN AT DESIGNATED ACCESSIBLE PARKING SPACES

Intensity in use of the corridor shall be a criterion when establishing the minimum width and length of the corridor (see Fig. 41). The minimum unobstructed width of corridors shall be 1 500 mm, with a preference for a width of 1 800 mm.

Where less than 1 800 mm wide, a corridor shall be provided with passing places, 1 800 mm wide and at least 1 800 mm in length at reasonable intervals. These dimensions shall be exclusive of handrails and any other projections, for example portable fire extinguishers, notice boards, etc.

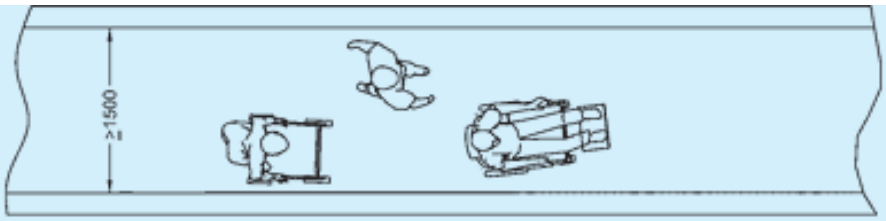

41A MINIMUM UNOBSTRUCTED WIDTH OF CORRIDOR

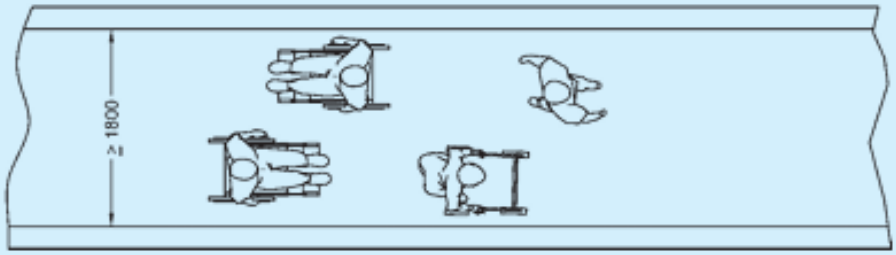

41B PREFERRED CORRIDOR WIDTH

All dimensions in millimetres.

Changes of direction within a corridor shall have a turning circle with a diameter of 1 500 mm or more, clear of any obstructions (see Fig. 42).

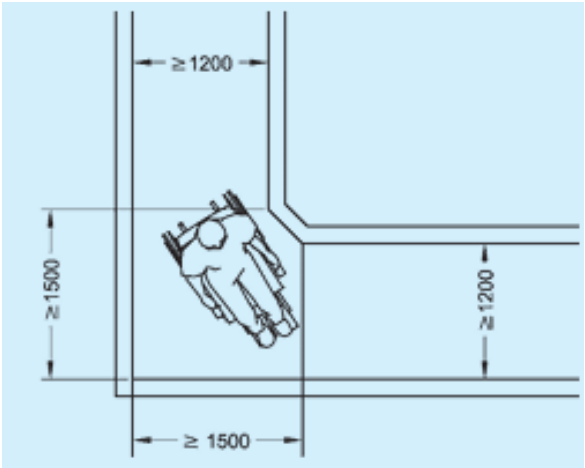

All dimensions in millimetres.

FIG. 42 SPACE REQUIRED FOR 90° TURN

To enable wheelchair users to approach doors, manoeuvring space as given below shall be provided. In narrow spaces, sliding doors may be preferable.

A minimum distance of 600 mm shall be provided beyond the leading edge of door to enable a wheelchair user to manoeuvre and to reach the handle.

Wheelchair manoeuvring spaces shall be free of any obstructions and be provided on the side of the door handle in the following manner (see also Figs. 44 and 45):

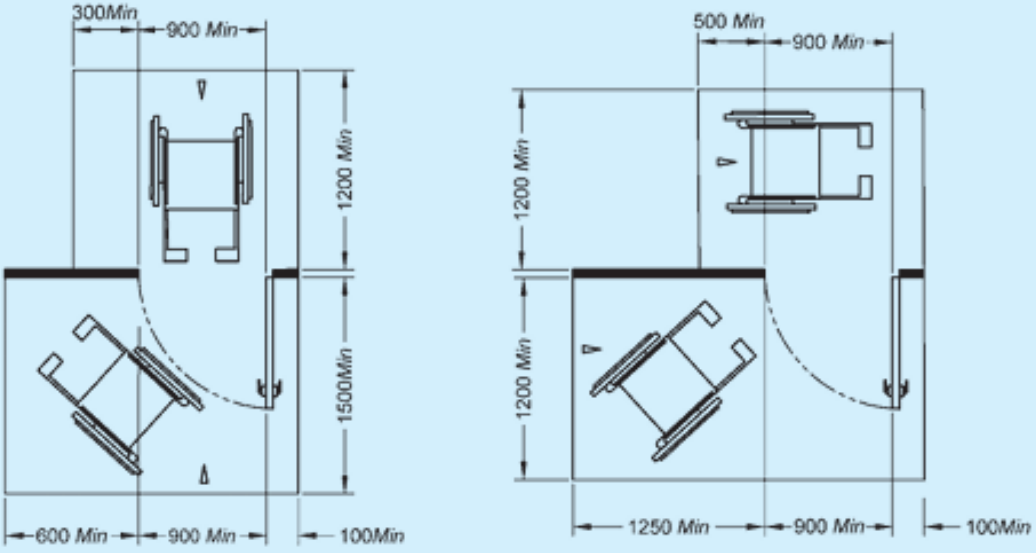

All dimensions in millimetres.

FIG. 44 MANOEUVRING SPACE NEEDED BY WHEELCHAIR USERS TO APPROACH DOORS

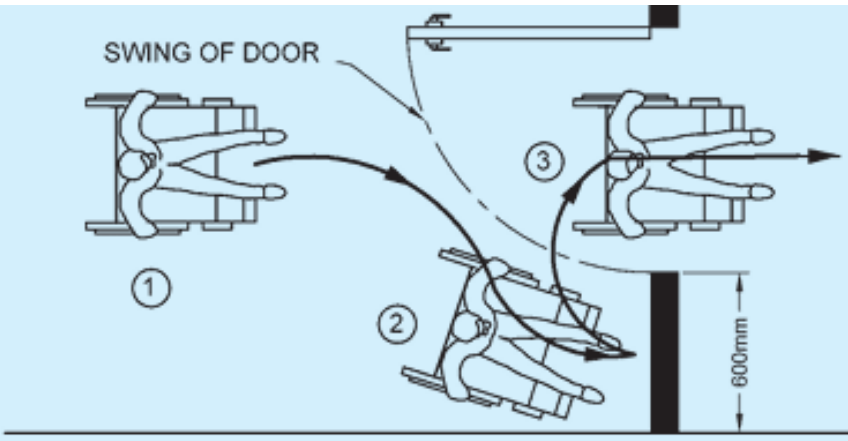

FIG. 45 POSITION TAKEN BY A WHEELCHAIR USER WHEN NEGOTIATING DOOR IN PASSAGE WAY

Handrails and Grab Bars

Handrails/grab bars are extremely important features and shall be designed to be easy to grasp and to provide a firm and comfortable grip so that the hand can slide along the rail

without obstruction. Many persons with disabilities rely upon handrails/grab bars to maintain balance or to prevent serious falls. Handrails are used as a locational and mobility aid by persons with visual impairments and as a support for persons with mobility impairments. The handrail/grab bars shall be securely fixed to the wall. To aid identification, the colour of the handrail/grab bar shall contrast with the wall behind.

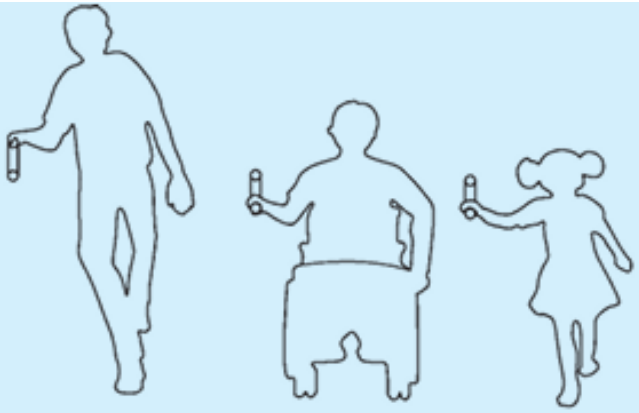

FIG. 52 HANDRAILS AT TWO LEVELS TO HELP CHILDREN AND PEOPLE WITH SHORT STATURE

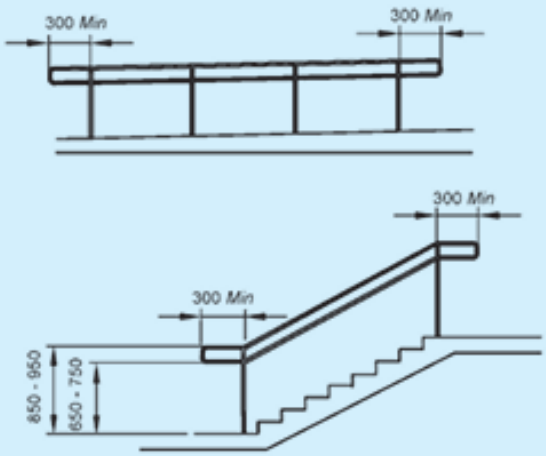

All dimensions in millimetres.

FIG. 53 HANDRAILS FOR STEPS AND STAIRS

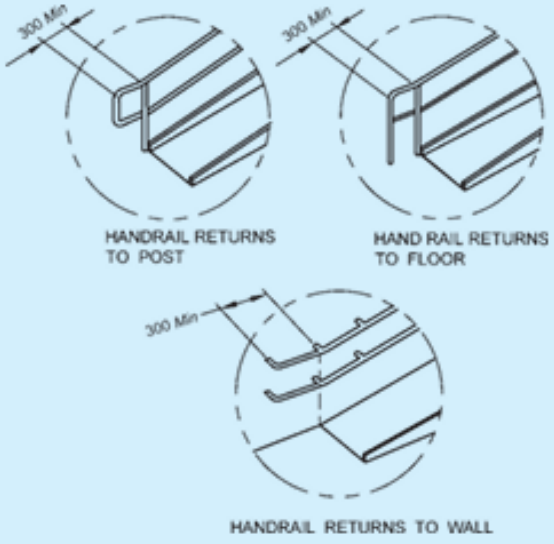

All dimensions in millimetres.

FIG. 54 TYPICAL HANDRAIL EXTENSIONS

Lift Size

The minimum size of the lift shall be 1 500 mm wide by 1 500 mm deep, that allows easy manoeuvrability of wheelchair users (see Fig. 58).

Lift Door

The clear opening of entrance to the lift car shall be at least 900 mm. The doors shall be constructed as automatic horizontal sliding doors. The lift door shall be contrasting in colour from the adjoining wall. There shall be no difference in level between the lift door and the floor surface at each level. The gap between the lift door and building floor shall not be more

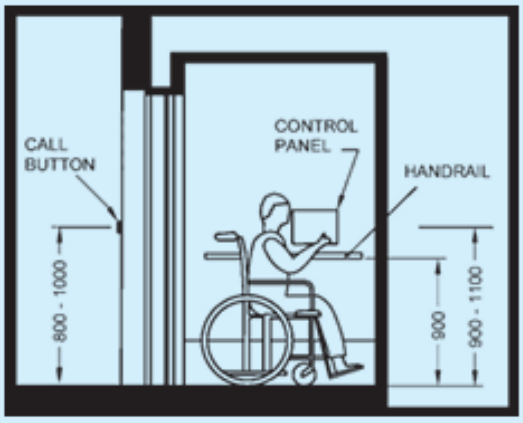

All dimensions in millimetres.

FIG. 59 PLACEMENT OF LIFT ACCESSORIES

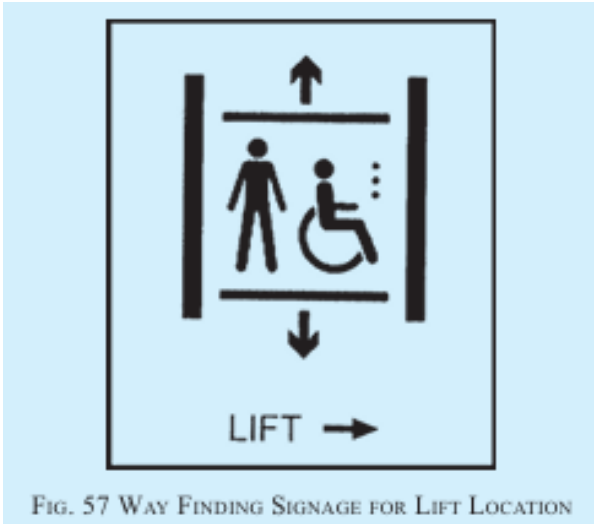

FIG. 57 WAY FINDING SIGNAGE FOR LIFT LOCATION

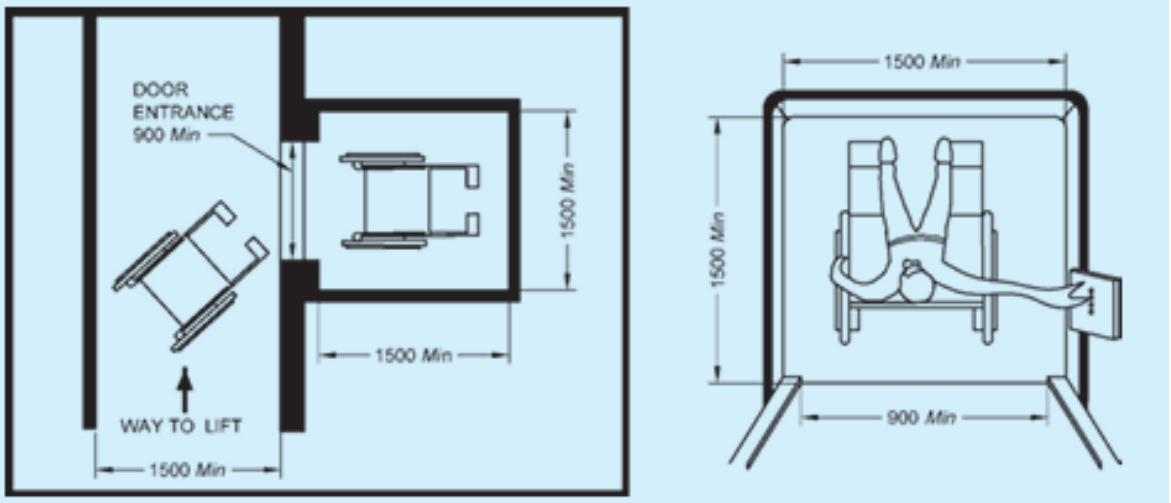

All dimensions in millimetres.

FIG. 58 LIFT SIZE

than 12 mm.

B-9.2 Wheelchair User Accessible Toilet Rooms

B-9.2.1 This Part gives the characteristics and requirements for the two types of wheelchair user accessible toilet rooms, namely, Type A and Type B.

The clear manoeuvring space of the toilet room shall allow frontal, oblique and lateral transfer. Type A toilet with a central placement of WC allows right and left lateral transfer, and may be more suitable when assistance is needed. Types B only allow one side transfer.

The clear manoeuvring space at floor level in front of the water-closet and the washbasin in case of Type A toilets shall be 1 800 mm × 1 800 mm, except for Type B where it shall be 1 500 mm × 1 500 mm by using the 300 mm space under the washbasin as part of the total manoeuvring space.

The minimum free clearance beside the water-closet shall be 900 mm, whereas 1 200 mm is preferred for lateral transfer and assistance.

NOTE - Minimum clearance of 900 mm accommodates only 65 percent of the wheelchair users, clearance of 1 200 mm accommodates 90 percent of all wheelchair users especially also those who use powered wheelchairs. The minimum dimensions for a Type A accessible toilet room are 2 200 mm width and 2 300 mm depth, and the minimum dimensions for a Type B accessible toilet room are 1 700 mm width and 2 200 mm depth.

NOTE - In case of existing buildings, as part of exceptional considerations, the measures given above cannot be achieved due to technical reasons, the manoeuvring space at floor level may be reduced, but it should be recognized that such a reduction limits the number of people who can use these toilet rooms.

B-9.2.2 Type A Toilet Room with Lateral Transfer from Both Sides

B-9.2.2.1 Type A accessible toilet room has the following characteristics (see Fig. 74 and Fig. 75):

a) Lateral transfer from both sides,
b) Manoeuvring space uninterrupted by washbasin and pan,
c) Independent water supply beside water-closet,
d) Horizontal grab rails at both sides, and
e) Toilet paper dispensers on both folding grab rails.

B-9.2.2.2 Type A accessible toilet room shall meet the following requirements (see Fig. 74):
a) It shall have minimum internal dimensions 2 200 mm × 2 300 mm.
b) The layout of the fixtures in the toilet shall be such that there is a clear manoeuvring space that provides a wheelchair turning radius of 1 800 mm in front of the water-closet and washbasin in the accessible toilet unit.
c) It shall have all fixtures and utilities arranged in a manner to provide a clear space of 900 mm × 1 350 mm for wheelchair users to access them.
d) It shall have clear space of not less than 900 mm wide next to the water-closet.
e) It shall be equipped with a door complying with B-9.4.

f) It shall have a water-closet complying with B-9.5, grab bars complying with B-9.6 and washbasin complying with B-9.7.
g) It shall have essential washroom accessories complying with B-9.8.
h) It shall have an alarm to seek emergency help, complying with B-9.12.
j) It shall have the toilet roll dispenser and hand water faucet mounted below the grab bars and at not more than 300 mm from the front edge of the seat and at a height between 50 mm and 200 mm from the top of the water-closet seat.
k) Cloth hooks should be set at different heights, 900 mm to 1 100 mm, and additionally at least one hook at 1 400 mm; and projecting not more than 40 mm from the wall.
m) Where possible, be equipped with a shelf of dimensions 400 mm × 200 mm fixed at a height of between 900 mm and 1 000 mm from the floor.

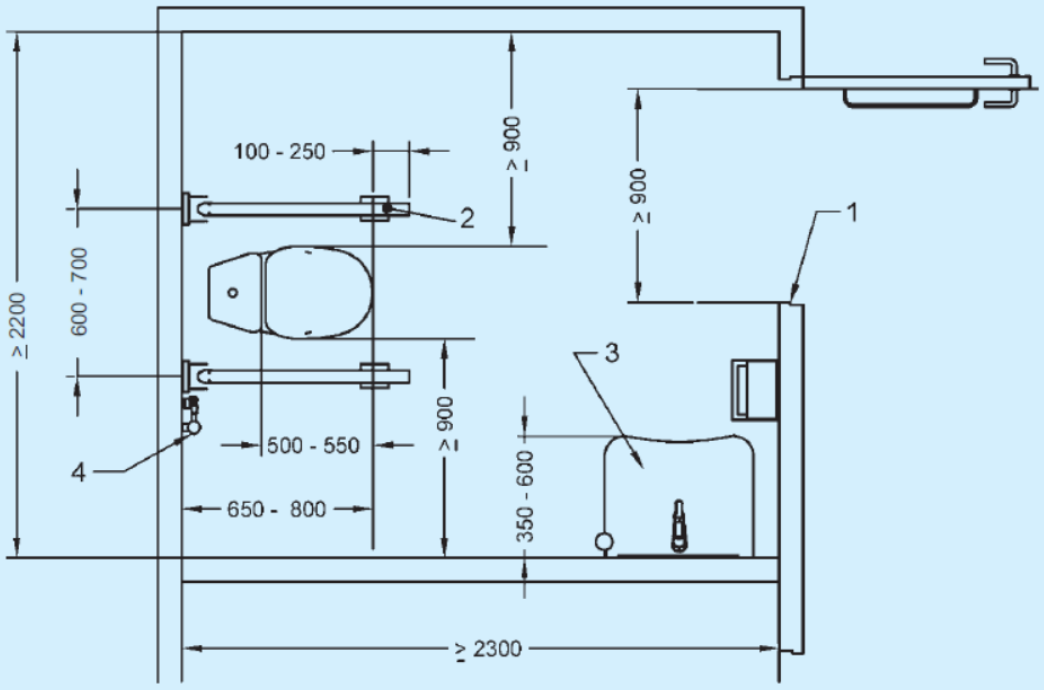

Key
1 Minimum 900 mm
2 Foldable grab bars, both sides
3 Washbasin
4 Independent water supply

All dimensions in millimetres.

FIG. 74 EXAMPLE OF TYPE A TOILET ROOM — LATERAL TRANSFER FROM BOTH SIDES

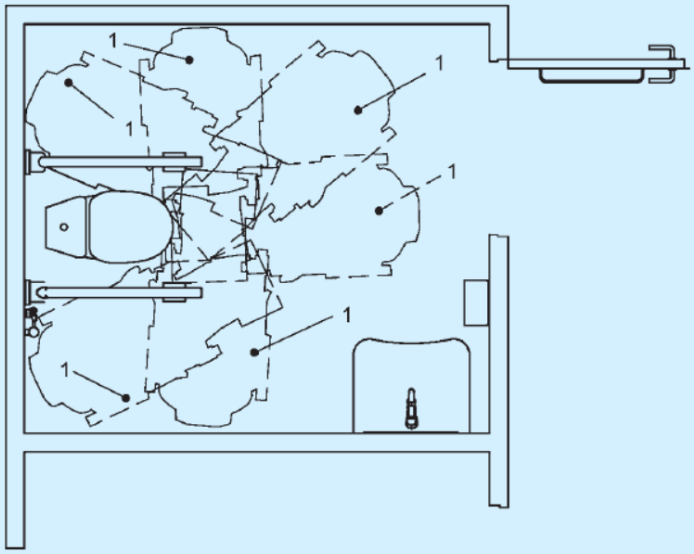

Key
1 Possible transfer positions

FIG. 75 TYPE A TOILET ROOM TRANSFER OPTIONS

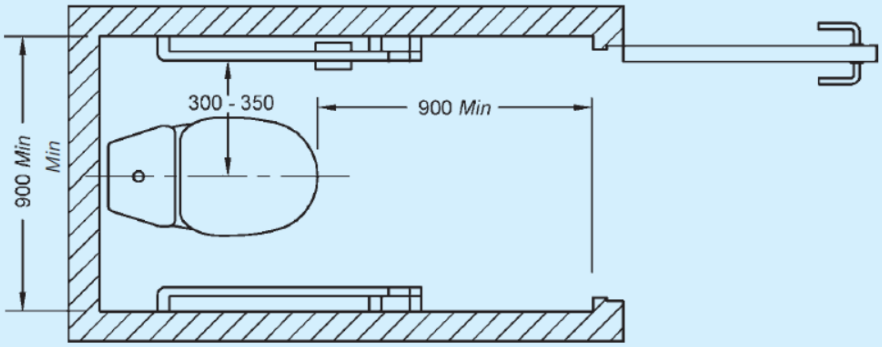

All dimensions in millimetres.

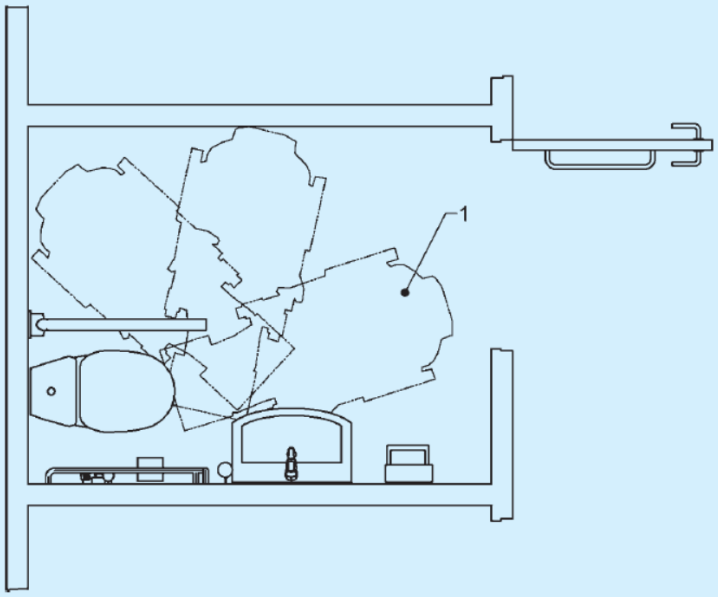

Key
1 Possible transfer positions

FIG. 77 TYPE B TOILET ROOM TRANSFER OPTIONS

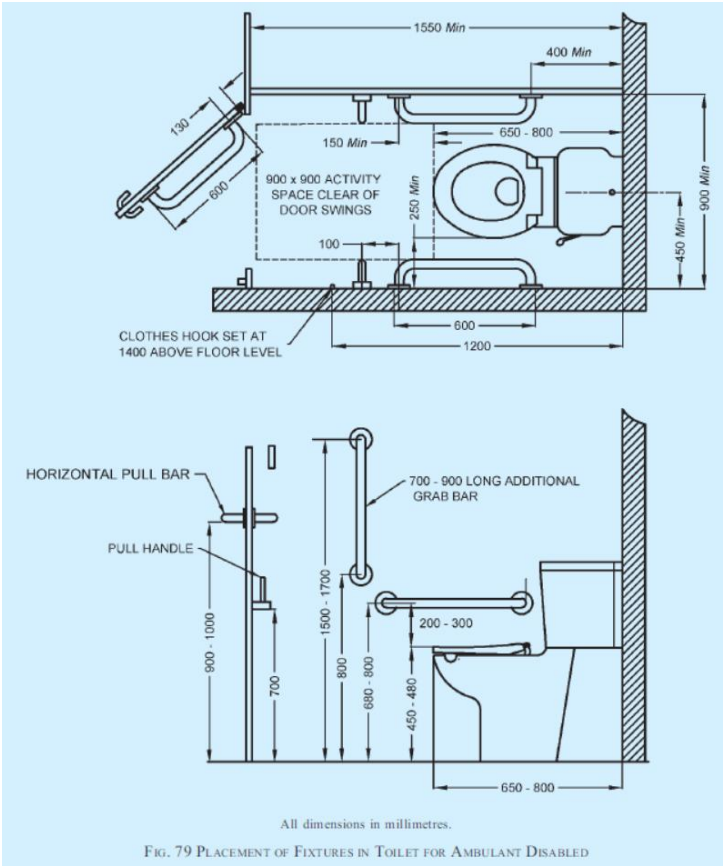

All dimensions in millimetres.

FIG. 79 PLACEMENT OF FIXTURES IN TOILET FOR AMBULANT DISABLED

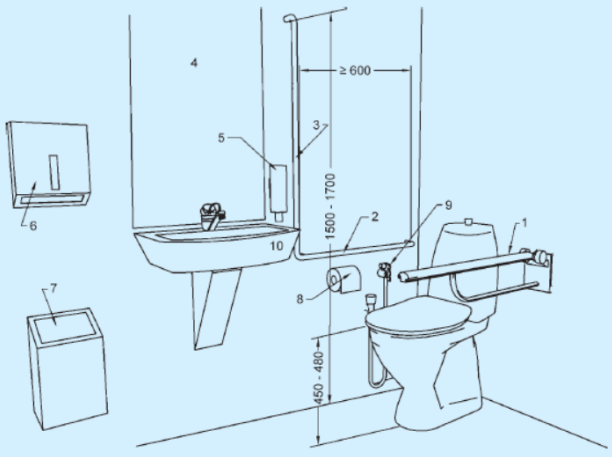

Key

1 Drop down support grab bar at seat height plus 200 to 300 mm
2 Wall mounted horizontal grab bar at seat height plus 200 to 300 mm
3 Wall mounted vertical grab bar
4 Mirror, top height minimum 900 mm, bottom height maximum 900 mm above floor
5 Soap dispenser 800 to 1 000 mm above floor
6 Towels or dryer 800 to 1 100 mm above floor
7 Waste bin
8 Toilet paper dispenser 600 to 700 mm above floor
9 Independent water supply
10 Small finger rinse basin 350 mm maximum projection

All dimensions in millimetres.

FIG. 80 POSITIONING OF GRAB BARS, WATER SUPPLY AND OTHER TOILET ACCESSORIES IN TYPE B CORNER TOILET

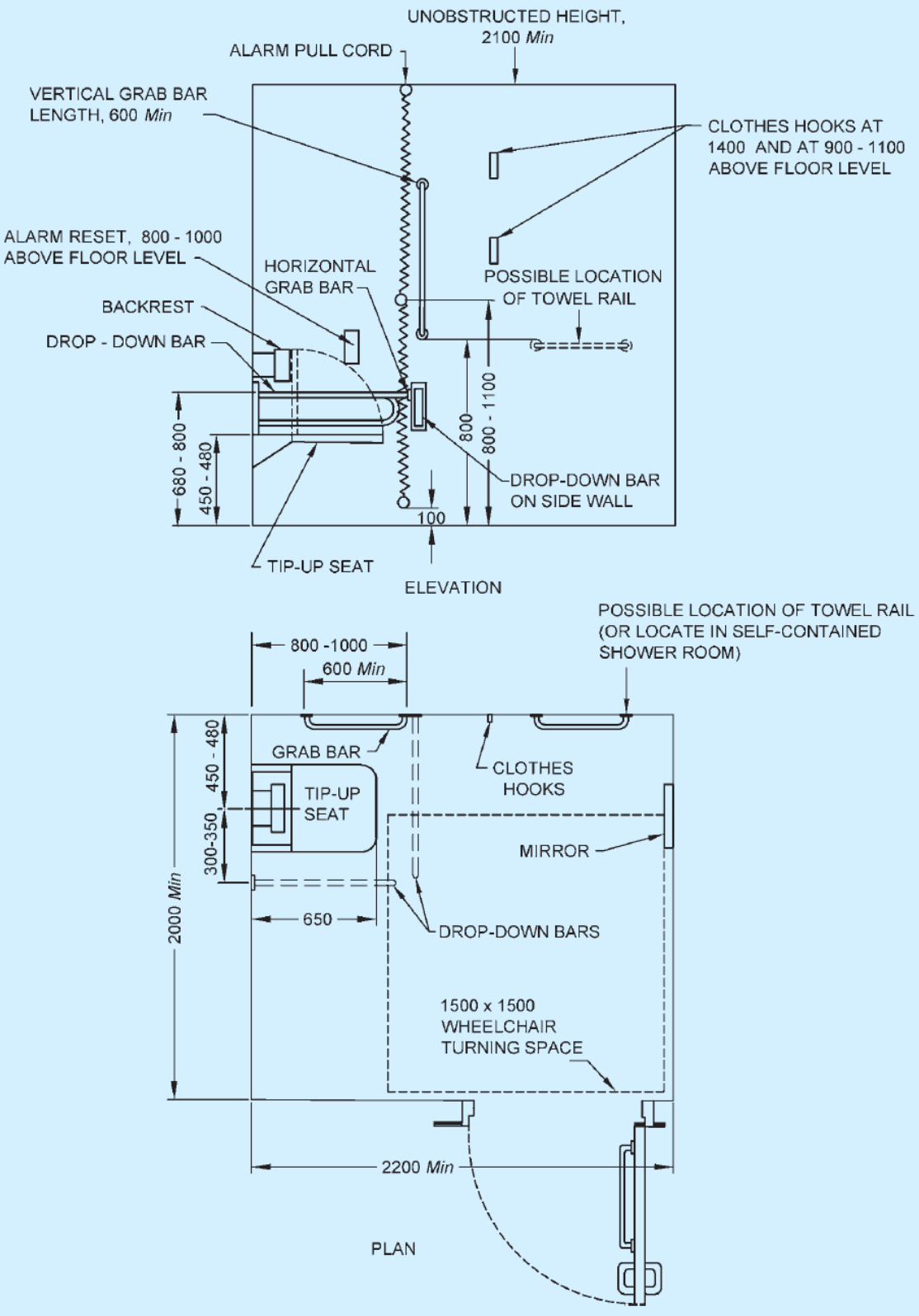

All dimensions in millimetres.

FIG. 86 SELF-CONTAINED CHANGING ROOM FOR INDIVIDUAL USE

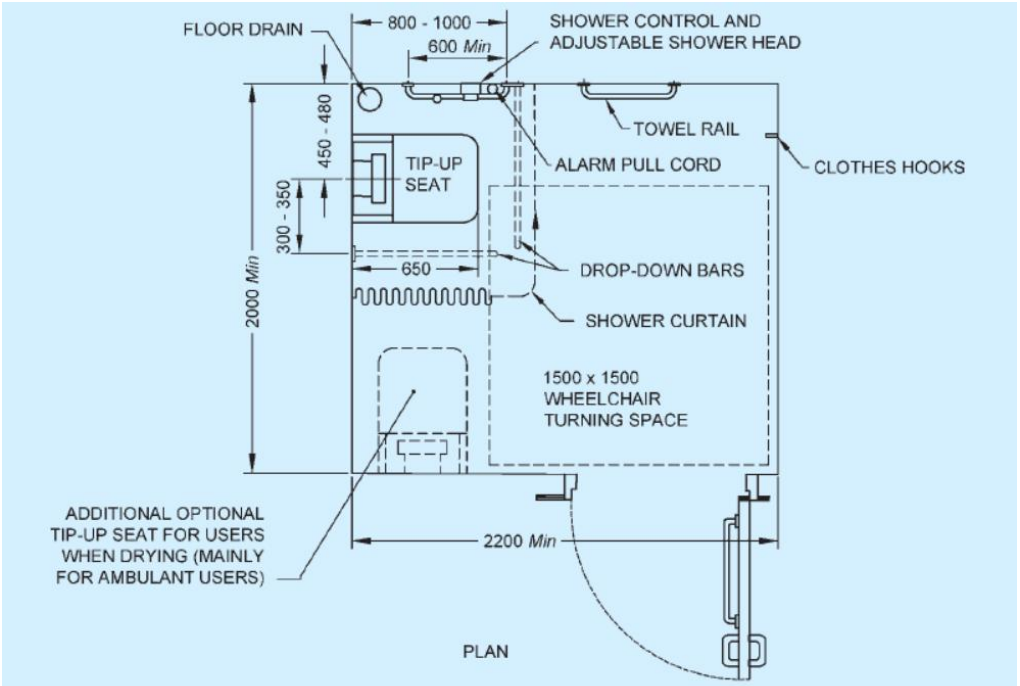

NOTE — Alarm pull cord, horizontal and vertical grab bars, shower curtain bar and towel rail not shown in elevation for clarity.

All dimensions in millimetres.

FIG. 85 SELF-CONTAINED SHOWER ROOM FOR INDIVIDUAL USE

.

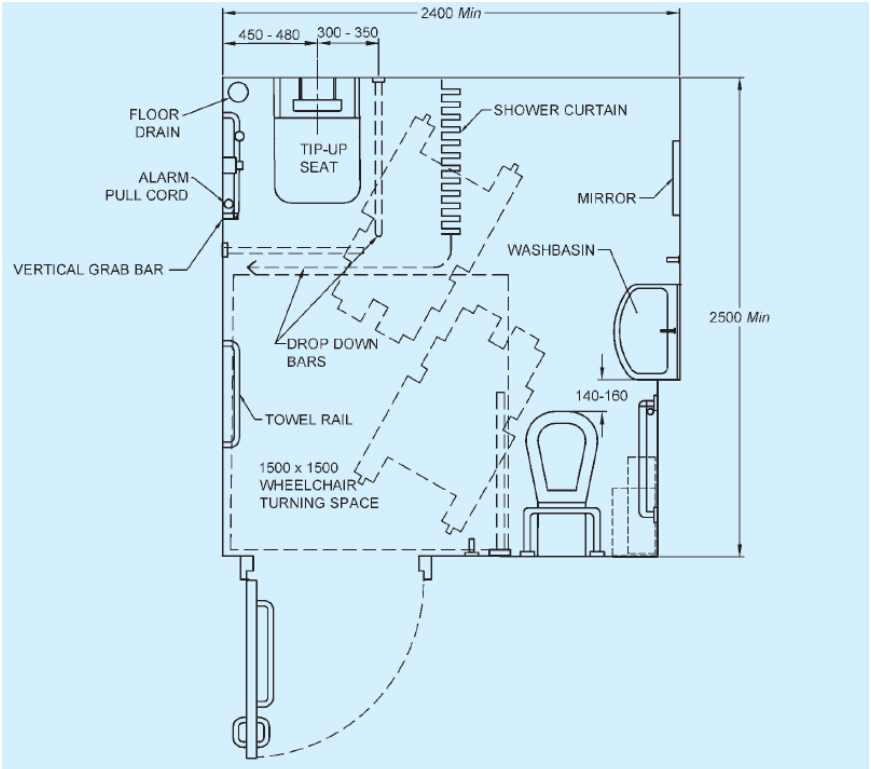

NOTES

1 Layout shown for right-hand transfer to shower seat and water closet.

2 The larger washbasin are set back 200 mm to maintain the correct relationship of its leading edge with the water closet.

All dimensions in millimetres

FIG. 87 SHOWER ROOM INCORPORATING AN ACCESSIBLE CORNER TOILET FOR INDIVIDUAL USE



FIG. 89 SIGNAGE FOR DIFFERENT SANITARY FACILITIES

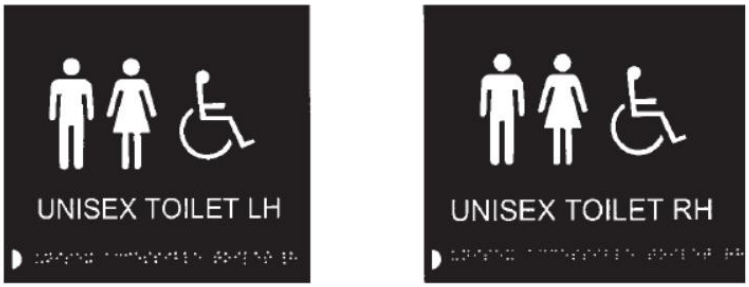

FIG. 90 SIGNAGE INDICATING TRANSFER OPTIONS (RIGHT HAND OR LEFT HAND) IN UNISEX ACCESSIBLE TOILET

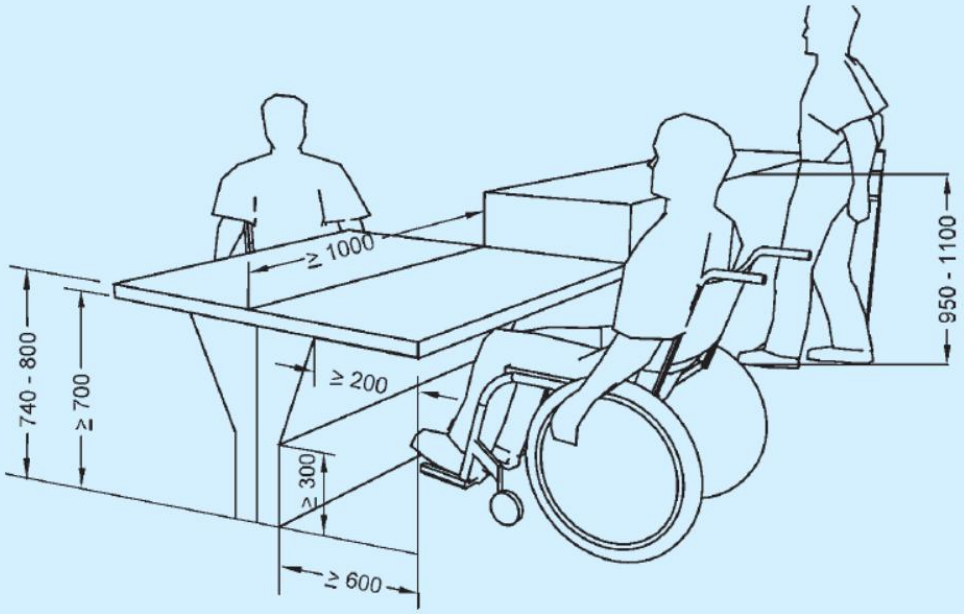

All dimensions in millimetres.

FIG. 91 HEIGHTS OF COUNTERS SUITABLE FOR WHEELCHAIR USERS AND PEOPLE STANDING

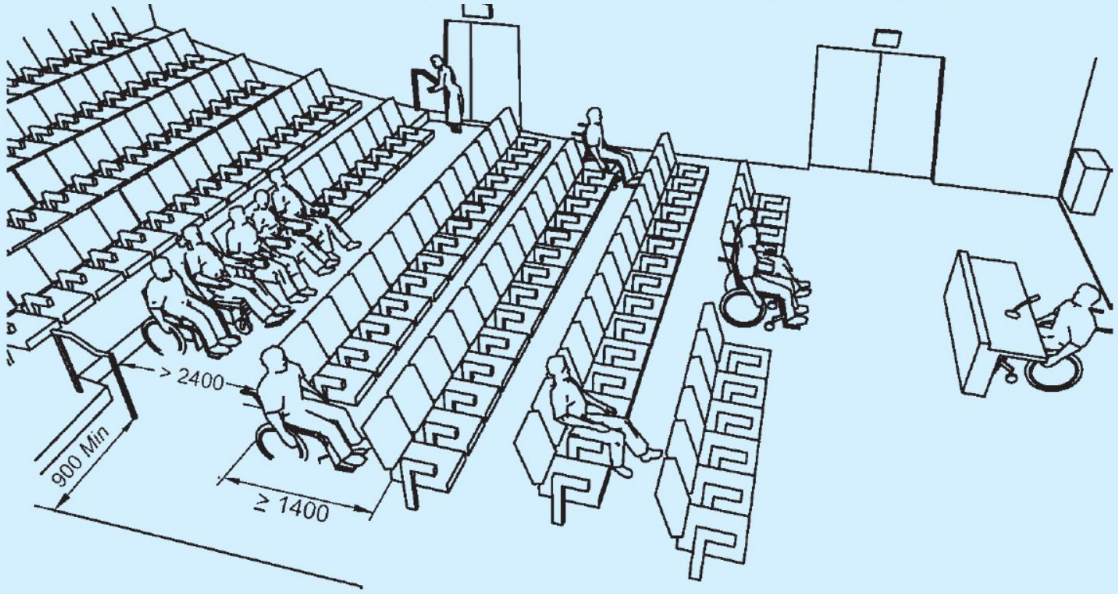

All dimensions in millimetres.

FIG. 92 EXAMPLES OF VIEWING SPACES FOR WHEELCHAIR USERS

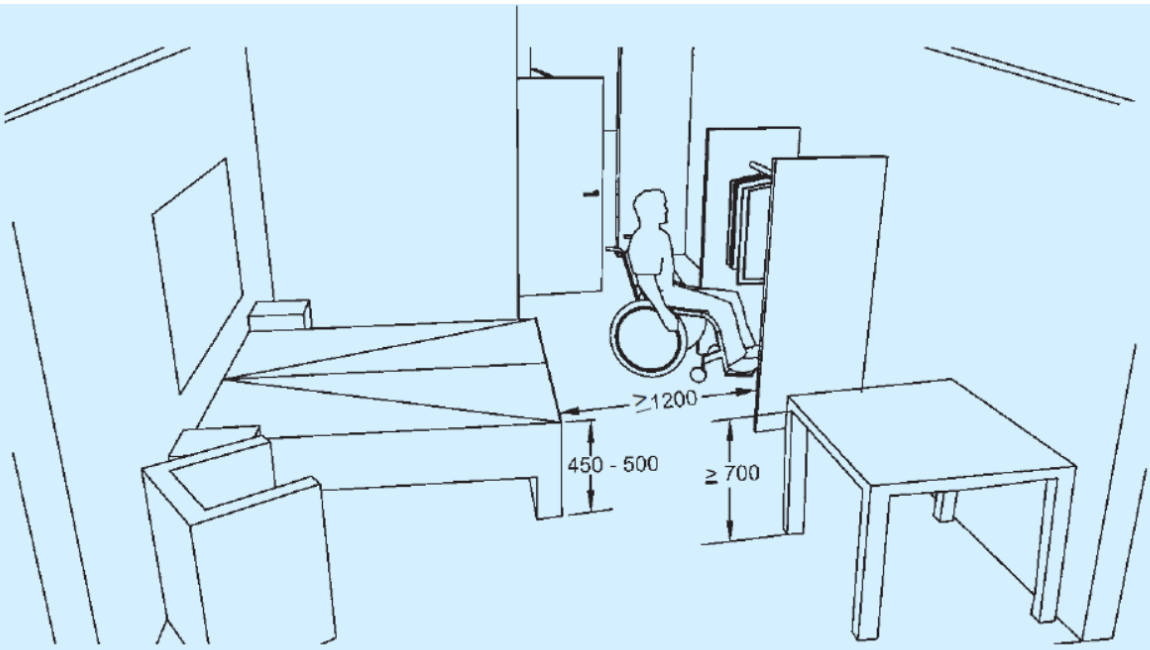

All dimensions in millimetres.

FIG. 93 EXAMPLE OF SPACE ALLOWANCES FOR ACCESSIBLE BEDROOM

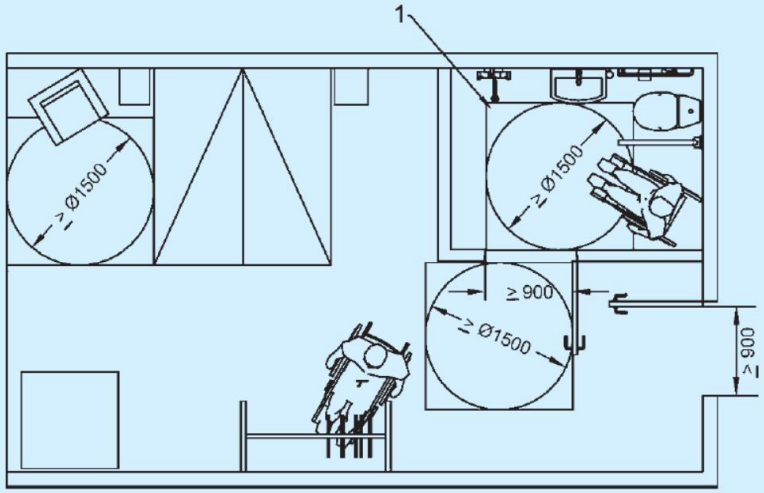

Key
1 Shower area

All dimensions in millimetres.

FIG. 94 EXAMPLE OF SPACE ALLOWANCES FOR ACCESSIBLE BEDROOM AND TOILET/SANITARY ROOM

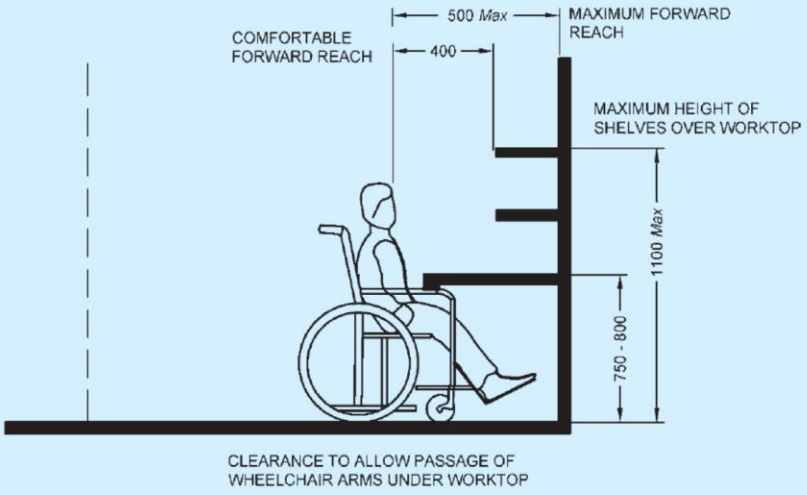

All dimensions in millimetres.

FIG. 95 REQUIREMENTS FOR COUNTER TOP

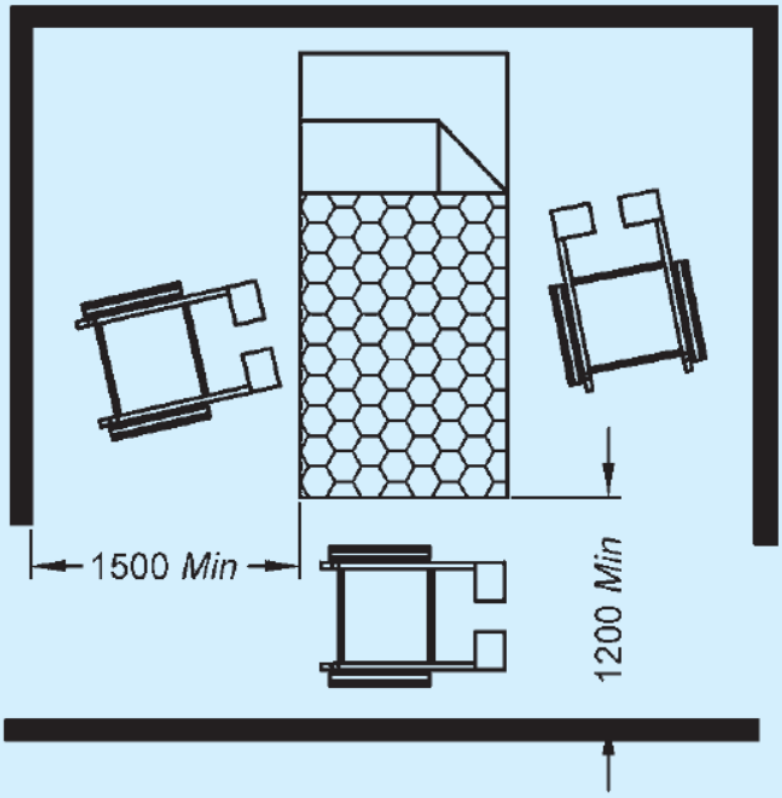

All dimensions in millimetres.

FIG. 97 SPACE AROUND BED

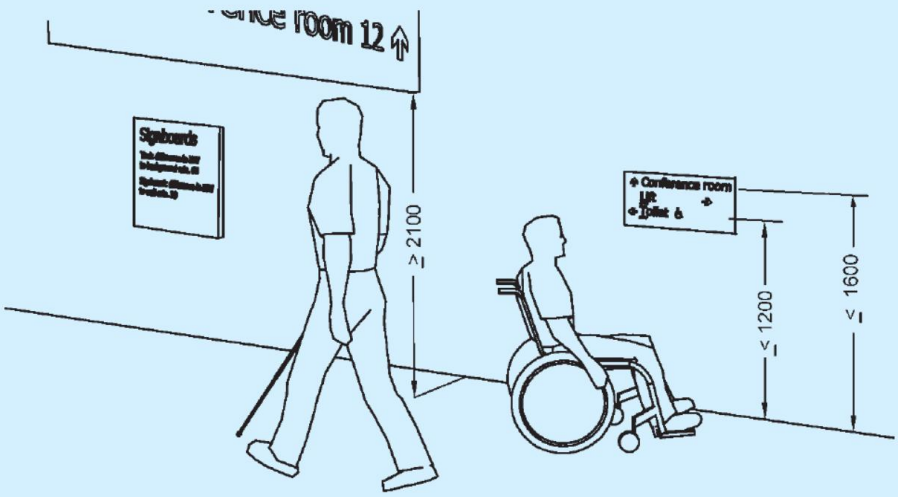

All dimensions in millimetres.

FIG. 100 HEIGHT OF SIGNS

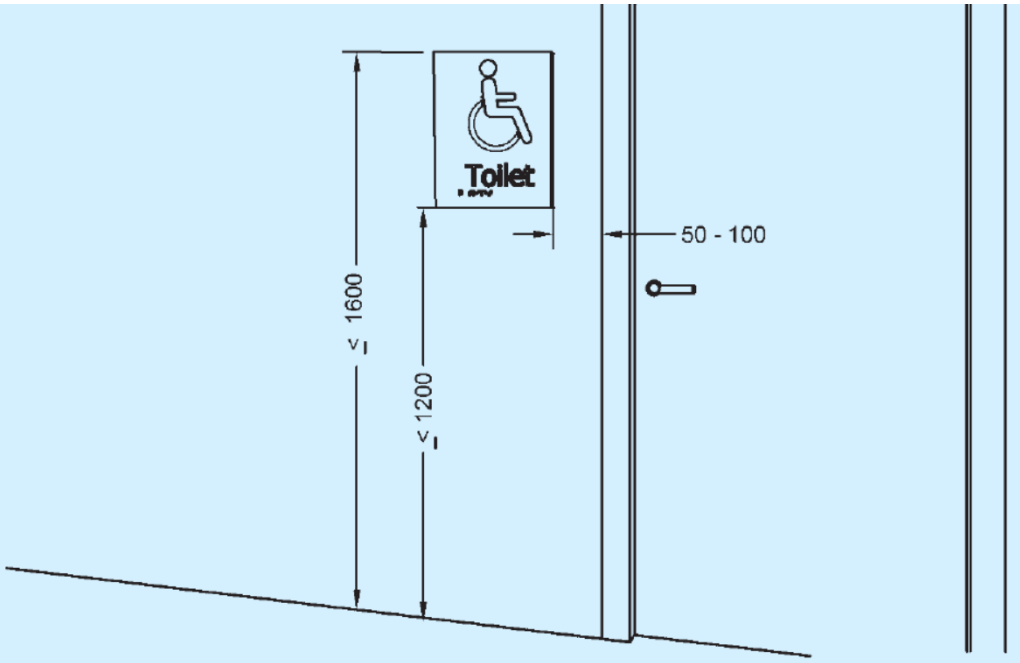

All dimensions in millimetres.

FIG. 101 LOCATION OF DOOR SIGNS ON THE LATCH SIDE OF THE DOOR

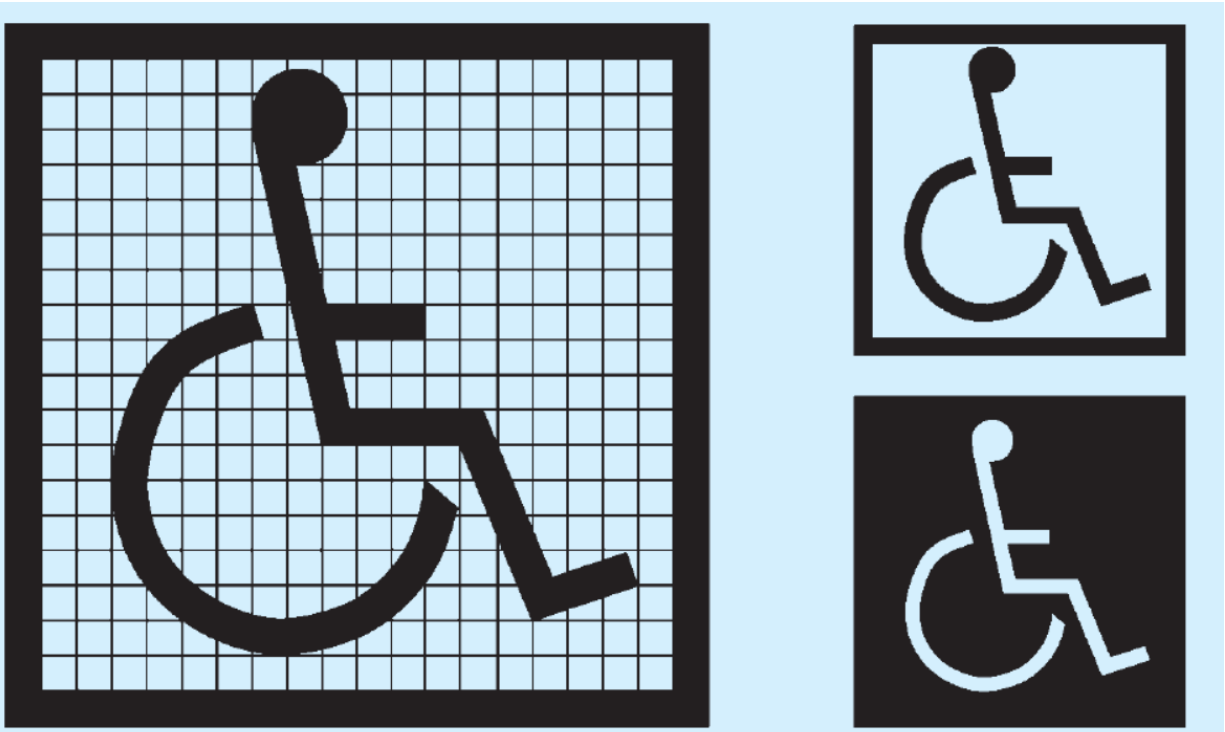

105A PROPORTIONS 105B DISPLAY CONDITIONS

FIG. 105 INTERNATIONAL SYMBOL OF ACCESSIBILITY

LIST OF REQUIREMENTS FOR HERBAL GARDEN

List of Medicinal Plants

S.N.	COMMON NAME	BOTANICAL NAME	LOCATION	QUANTITY
1	Amla	Embalic officinalis	Ground	2
2	Ark saphed	Calotropis gigantia	Ground	2
3	Ashoka	Saraca indica	Ground	4
4	Ashwagandha	Withaniasomnifera	Ground	20
5	Bakayan	Ailanthus excela	Ground	4
6	Bathua	Chenopodium album	ground	2
7	Bel	Aegle marmelos	Ground	3
8	Ber	Ziziphus jujubba	Ground	2
9	China rose	Hibiscus rosasinensis	Ground	1
10	Chitrak	Plambagozeylanica	Ground	4
11	Dhania	Coriandrum sativum	Ground	5
12	Durva	Cynodondactylon	Ground	2
13	Erand	Ricinus communis	Ground	2
14	Giloy	Tinospra cordifolia	Ground	2
15	Chinese hibiscus	Hibiscus rosa sinensis(yellow)	Ground	1
16	Harsinghar	Nyctanthes arbor-tritis	Ground	5
17	Jamun	Syzigiumcumini	Ground	7
18	Kapas	Gossypium herbaccum	Ground	2
19	Mango	Mangifera indica	Ground	3
20	Mogra	Jasminum	Ground	4
21	Neem	Azadirachta indica	Ground	50
22	Patharchatta	Bryophhilumpinnatum	Ground/pot	2
23	Ratanjot	Jatropacurcas	Ground	31
24	Sarapagnadha	Rawofolia serpentina	Ground	13
25	Shajna	Moringa oliefera	Ground	5
26	Shatavari	Asparagus recemosus	Ground	10
27	Tulsi	Ocimum sanctum	Ground	3
28	Kolkata marigold	Calendula officinalis	Ground	2
29	Raktavasa(*Adulsa*)	*Justicia adhatoda*	Ground	4
30	Nagoriashwagndha	Withania ashwagandha	Ground	5
31	Ajwain	Trachyspermumammi	Pot	1
32	Bhang	Cannabis Sativa	Pot/ground	2
33	Bhumi amla	Phyllanthus niruri	Pot/ground	1
34	Neel chitrak	Plumbago zeylanica	Pot	2
35	Gwarpatha	Aloe vera	Pot	1
36	Imli	Tamrindus indica	Grond	1
37	Japanese mint	Mentha arvnsis	Pot/ground	2
38	papaya	Carica papaya	Ground	2
39	Vata(Banyan tree)	Ficus bengalensis	Ground	2
40	Digdhi (Bara dudhi)	Euphorbia hita	Pot	4
		Total		220

Total Species: 40

Total Plant: 220

Z



Azadirachta indica(neem)



Opuntia (nagfani)



Zizyphus jujuba(Ber)



Cynodon dactylon(Durva)



Rawofolia serpentina(Sarapagnadha)



Jatropa curcas (Ratanjot)



Ricinus communis(Erand)



Moringa oliefera (Shajna)



Ailanthus excela(Bakayan)



Syzigium cumini(Jamun)

CASTE STUDIES:

LIVE SITE STUDY1 –

All India Institute of Ayurveda (AIIA), Delhi

DESIGN BRIEF –

Project: **All India Institute of Ayurveda, New Delhi** - an apex tertiary-care Ayurveda institute with education, research, and hospital facilities.

c **PROPOSING AGENCY:** Ministry of AYUSH, Government of India



Purpose:

Integration of traditional Ayurvedic medicine with modern diagnostics; to provide a 200-bed referral hospital, 25 specialty departments, 12 clinics, and 8 interdisciplinary research labs with PG/PhD programs.

LOCATION :

All India Institute of Ayurveda (AIIA), New Delhi, Ministry of AYUSH, Government of India. Mathura Rd, Gautampuri Awas, Sarita Vihar, New Delhi, Delhi 110076

AREA STATEMENT -

TOTAL PLOT AREA: 10 Acres / 40530 sqm.

PERMISSIBLE F.A.R.: 281061.52 sqm.

PROPOSED F.A.R. 29572 sqm.

PERMISSIBLE GROUND COVERAGE: 30% OF PLOT AREA = 12160 sqm.

GROUND COVERAGE: 12160 sqm.

PERMISSIBLE HEIGHT: 37 M

YEAR OF COMPLETION: 2015 (PHASE I)

The cornerstone of the institute was laid in 2007 upon approval of the Finance Ministry in 2003. The Government of India recommended the proposal to develop the institute, focusing on R&D, safety evaluation, and quality standards of Ayurveda medicines. The institute has been providing outpatient services since 2009.

During 2014, the Government of India established the Ministry of Ayush and AllA, Delhi, an autonomous institute under the Ministry of AYUSH.

OVERVIEW OF PROJECT

The All India Institute of Ayurveda is conceived as an Apex Institute for Ayurveda. It aims at bringing a synergy between Traditional Wisdom of Ayurveda and Modern tools and technology.

SURROUNDING AND ACCESSIBILITY

NEAREST TRAIN STATION: Tuglakabad Railway Station 1.6 km

AIRPORT: IGI, 23.3 km

METRO STATION: Mohan Estate, 900 m(walk)

The All-India Institute of Ayurveda is conceived as an Apex Institute for Ayurveda. It aims at bringing a synergy between Traditional Wisdom of Ayurveda and Modern tools and technology.

Overview of infrastructure



- It has a **200-bed hospital** for facilitating clinical research. The Institute has 25 Specialty Departments and 12 clinics with 8 in- ter-disciplinary research laboratories where 120 Scholars access for PG & Ph.D. programs every year.

- The hospital is equipped with state-of-the-art modern diagnostic tools and techniques which are used in teaching, training, and research.

The patient care is done primarily through Ayurveda of tertiary level. This institute also have an international collaborative centre for global promotion and research in Ayurveda.



SPACES :

Hospital Block- A **Ground Floor**	**Hospital Block - B** **Ground Floor**
1.Reception/Billing / Registration 2. SBI (bank) 3. Post-Operative room (Currently functioning as Screening OPD) 4. Emergency Room 5. Flu OPD 6. Radiology Services – Reception (radiology) – BMD – X-Ray – USG – CT scan 7. Pharmacy – AIIA Pharmacy (dispensing unit for free distribution of medicine)	1. OPD Registration 2.OPDs (07) Kayachikitsa Neurological Disorders Cancer Care Unit and other integrated OPDs of AYUSH Panchakarma Clinic Diabetic & Metabolic disorder Musculoskeletal 3.Canteen

– IMPCL Pharmacy (sale counter) – Oushadhi Pharmacy (sale counter)	

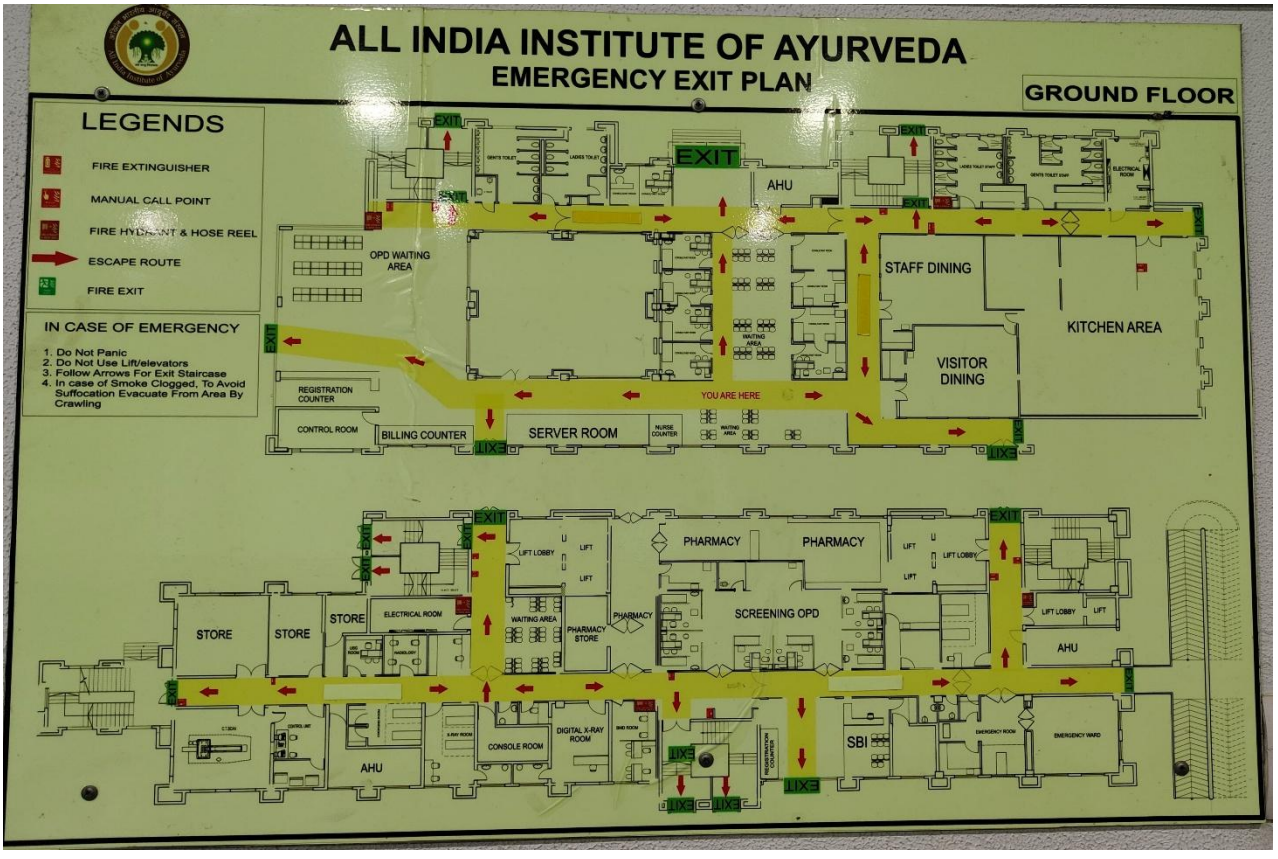

Hospital Block- A **First Floor**	**Hospital Block - B** **First Floor**
8. Reception (LAB) and sample collection area 9. Laboratory Microbiology Biochemistry Hematology Blood Bank	4. Hospital Administration Wing 5. Shalakya OPD Karna Nasa Gala Roga Vibhag (ENT) – (Room no.101, 102 & 103) Netra Vibhag (EYE OPD) – (Room no.110) 6. Dental OPD -(Room no.108) 7. Dental X-ray – (Room no.109) 8. Shalya General OPD- (Room no.104) 9.AnoRectal Clinic – (Room no. 105) 10. Ksharsutra Room – (Room no.106)



FIRST FLOOR PLAN







	11. Panchakarma Therapy Room- 2 (male & Female) 12. Physical Medicine Unit 13. Menopause Awareness Clinic 14. Swasthavritta Life Style Clinic

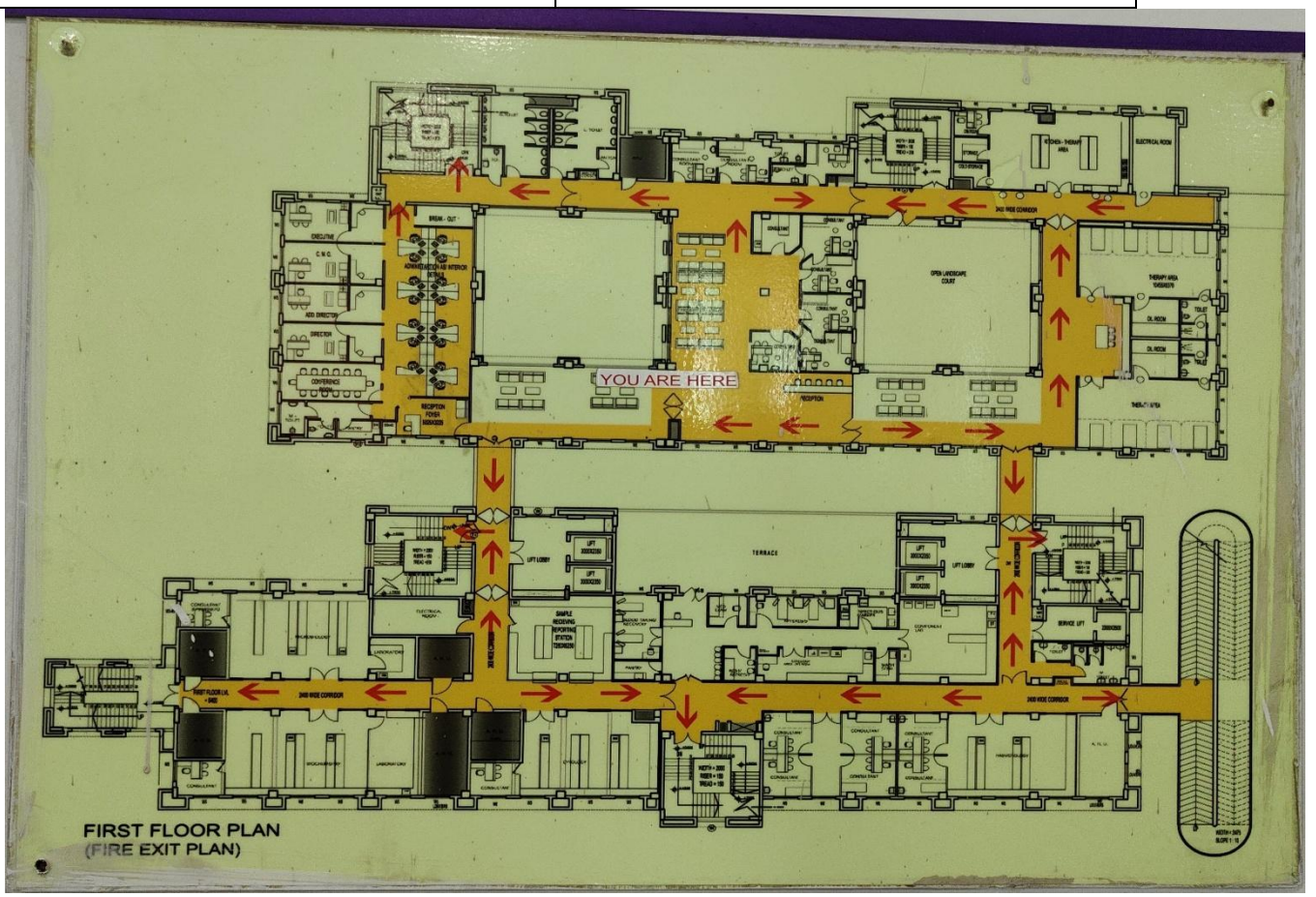

Hospital Block- A **Second Floor**	**Hospital Block - B** **Second Floor**
10. Operation Theater Block 11. CSSD 12. Labor Room 13. ICU	1. Striroga and Prasutitantra (Obstetrics and gynecology)-3 Infertility Clinic ANC Clinic Gynecology OPD 16. Neuro Developmental Clinic 17. Kumarabhrithya (Pediatrics)

	18. Kumarabhrithya – Respiratory & Allergic Clinic 19. Immunisation room 20. VIP Panchakarma (Male & Female) 21. Pediatric Panchakarma 22. NICU 23. Gynecology Ward 24. Pediatric ward (Male & Female)



SECOND FLOOR PLAN



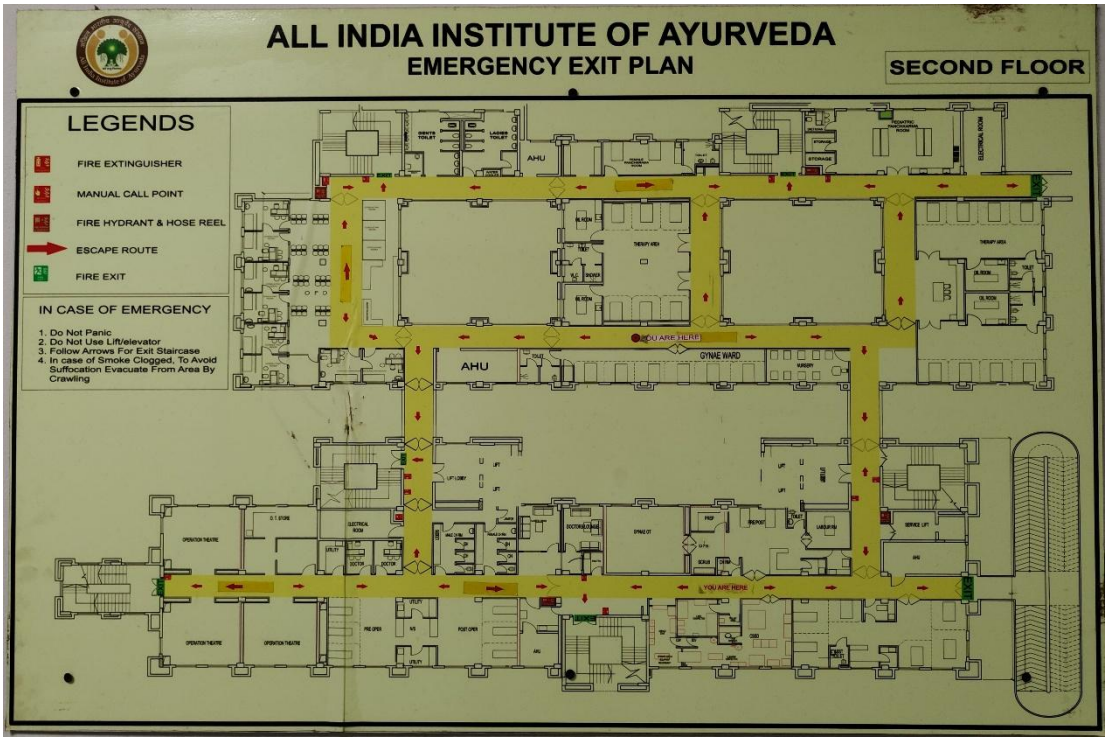

Hospital Block- A **Hospital Block - B**

Third Floor	ThirdFloor
14. Single occupancy room -17 15. Double occupancy room-5 16. Triple occupancy Room – 01 17. Procedure room – 02	25. General ward (6 Bed Occupancy Room) -4 26. Kriyakalpa Room- 1 27. Panchakarma Therapy Room – 1



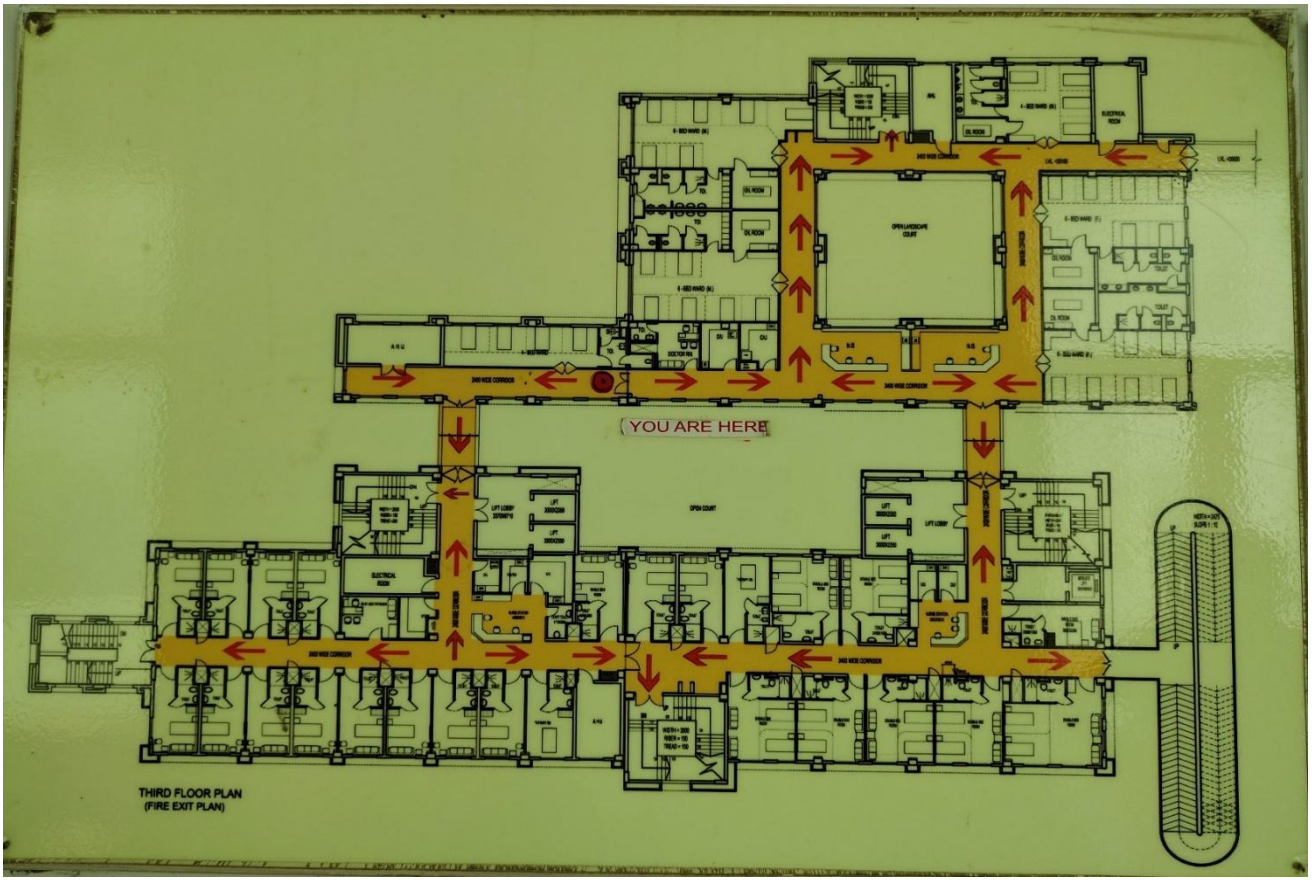

Hospital Block- A **Fourth Floor**	**Hospital Block - B** **Fourth Floor**
18. Single occupancy room -17 19. Double occupancy room-5 20. Triple occupancy room – 01 21. Procedure room – 02	28. General ward (6 Bed Occupancy Room) -4 29.4 Bed Occupancy Room- 1 30. Panchakarma Therapy Room – 1

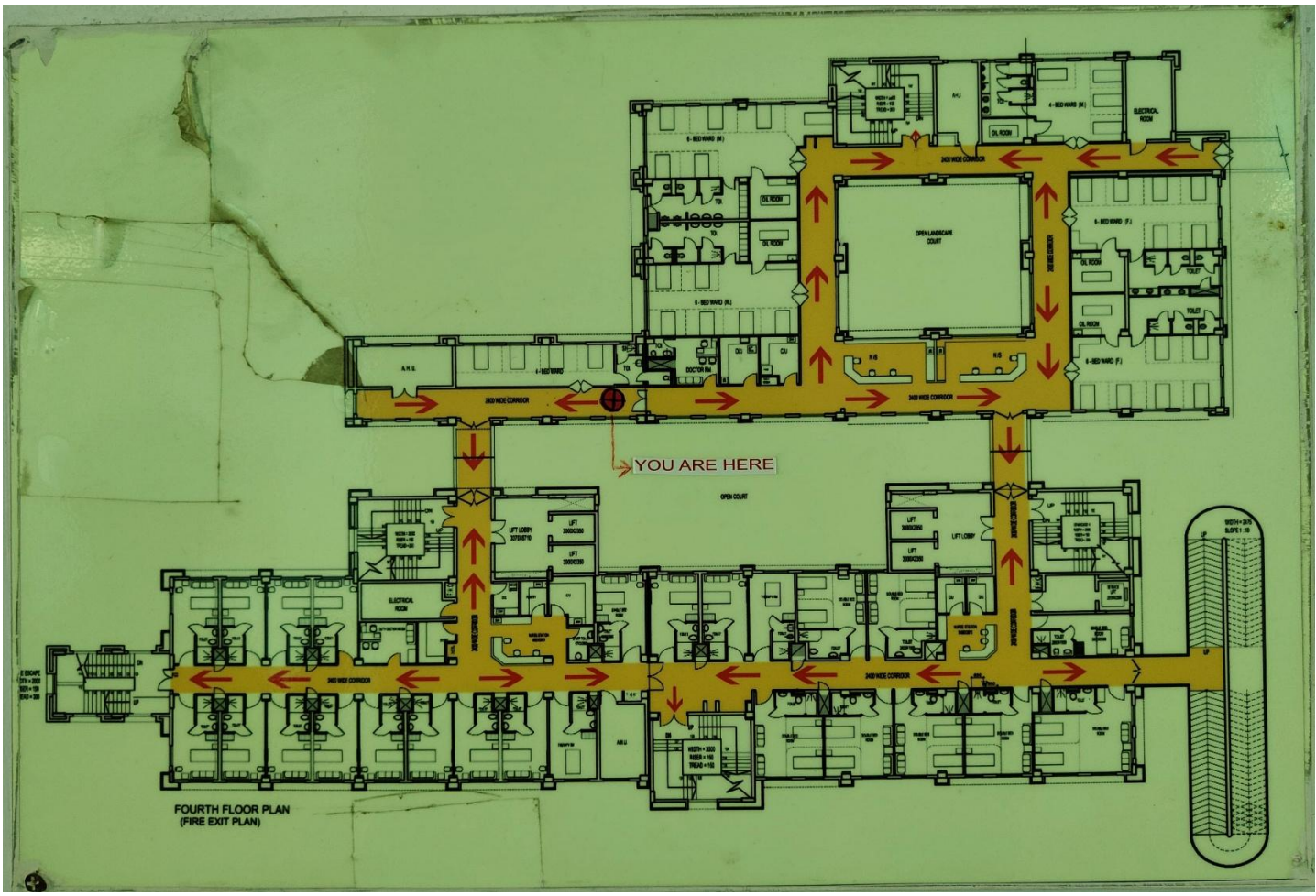

Hospital Block- A

Fifth Floor

22.VVIP Suite Room – 6

23.VIP Single Occupancy ROOM – 5

1. VIP Double occupancy room – 4
2. Panchakarma Therapy Room – 3

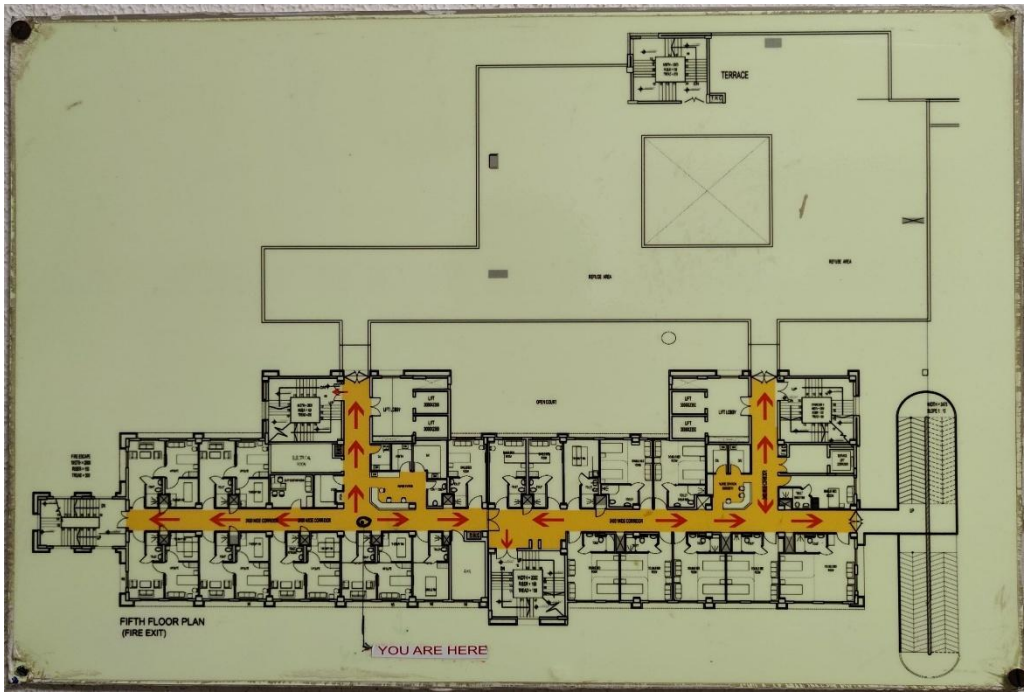

BASEMENT





Administrative block

Ground floor



- Waiting area
- Reception
- Model display of the AIIA building project
- Accounts and admin section
- PRO office
- Conference hall
- Director’s office
- Joint Director’s office
- Dean PG & PhD Office
- Mini Auditorium

First floor

- Learning Resource Centre
- Dhanwantri Multipurpose hall
- Lecture Room 1
- Lecture Room 2

Second floor

Dept of Ras Shastra and Bhaishajyakalpana
Dept of Dravyaguna

Faculty and HoD cabins

• Editorial Office—International Journal of Ayurveda Research
• National PharmaCOvigilance Coordination Centre
• Ras Shastra lab
• Bhaishajyakalpana Lab
• Museum Dept of RSBK
• Seminar Rooms

Third Floor

Department of Sharir Kriya (Ay. Physiology)
Department of Roga Nidan and Vikriti Vigyan (Ay. Pathology)

Faculty and HoD cabins

• Seminar Rooms
• Herbarium Development Unit, Trans Ganga Plain Region
• Experimental Research Laboratory
• Simulation Lab
• Pharmacology Laboratory



Fourth Floor

Department of Kaumarbhritya
Department of Prasooti Tantra and Stri Roga
Faculty and HoD cabins
PHI Project Room, Department
Seminar Rooms
Nutritional Lab of Swasthyavritta Department
Ayurinformatics Laboratory
Pediatric Research Laboratory
Analytical Chemistry Lab
Pychochemistry Lab
Departmental Research Laboratory
Laboratories of Rare Raw Drug Repository
Microbiology Lab, RRDR (Trans Ganga Plain Region)
Pharmcognosy Lab, RRDR (Trans Ganga Plain Region)

Fifth floor

Department of Shalya Tantra, Department of Shalakya Tantra
Seminar Rooms
Faculty and HoD cabins
Library
Ayush AACCC helpline office

Sixth floor

Department of Swasthyavritta,

Department of Kayachikitsa

Seminar rooms
Yoga and meditation room
Clinical Skill Development Lab
Centre for Integrative Oncology
Faculty and HoD cabins



Seventh floor

Department of Panchakarma

Department of Samhita Siddhanta and Maulik Siddhanta

Office of Estate officer
Seminar rooms
DAKSHYA–Ayush Sub Skill Council
Faculty and HoD cabins
Office of distinguished officer S.H. Acharya
Museum of plant origin and raw drugs
Experimental research labs
Manuscript unit
Labaratory room
NAAC office
Museum of Herbarium Section

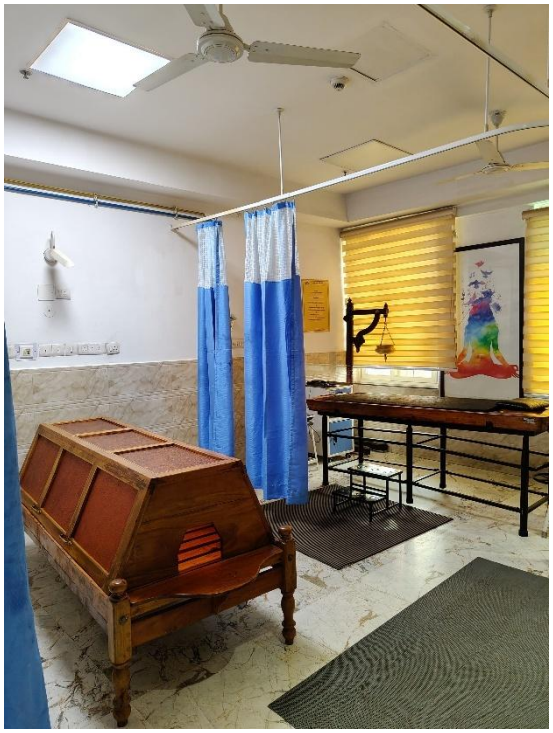


PUBLICATION DIVISION
संहिता सिद्धांत विभाग
DEPARTMENT OF SAMHITA SIDDHANT



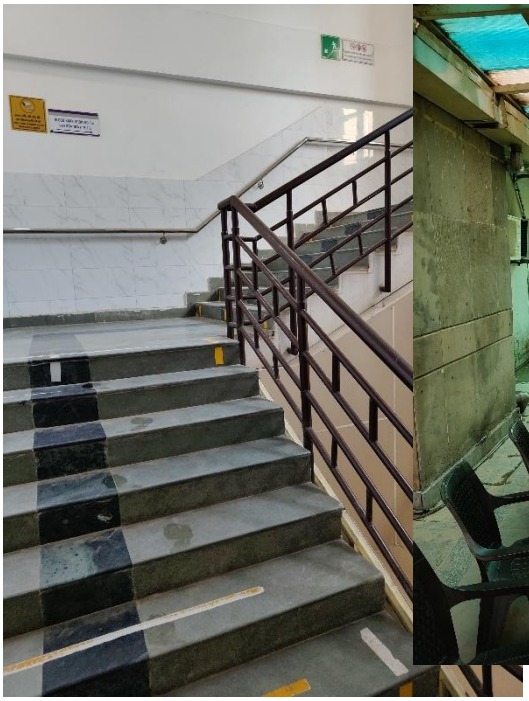







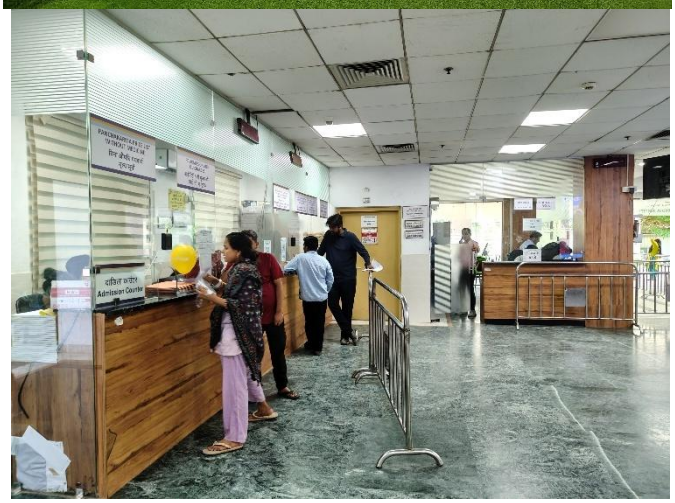



LIVE SITE STUDY 2-

KHUSHILAL SHARMA AYURVEDIC HOSPITAL



Design Brief –

Project: **Pandit Khushilal Sharma Government Ayurvedic Hospital, Bhopal**- an apex tertiary-care Ayurveda institute with education, research, and hospital facilities.

PROPOSING AGENCY: Government Ayurvedic Hospital with Academic and Research Facility.

Government of Madhya Pradesh, Department of AYUSH

LOCATION :

Situated in a semi-urban context in Bhopal, near Ayodhya Bypass, Madhya Pradesh, India.

Latitude: 23.2599° N | Longitude: 77.4126° E

Project Capacity: 100 bedded inpatient facility + outpatient departments + academic block

VISION & OBJECTIVE:

The hospital is envisioned as a center of excellence for Ayurvedic healthcare, offering:

Holistic treatment through Panchakarma, herbal medicine, diet therapy, yoga, and naturopathy.

A calm and natural healing environment rooted in traditional Indian architecture.

Integration of education, research, and clinical care in Ayurveda.

AREA: Total campus area: 5.5 acres (~22,000 sq.m.)

SURROUNDINGS:

East: Polytechnic Campus and Residential zone

West: Green buffer and highway approach

North: Bypass Road

South: Institutional plots

ACCESS & APPROACH:

Primary access from Ayodhya Bypass Road.

Secondary pedestrian and service access from rear roads.

Close proximity to city public transport, but within a green, noise-buffered campus.

SITE FEATURES:

Slight slope aiding surface drainage.

Dense plantation around periphery.

Existing built structures: Hospital block, Admin block, Academic building, Herbal garden, Pharmacy.





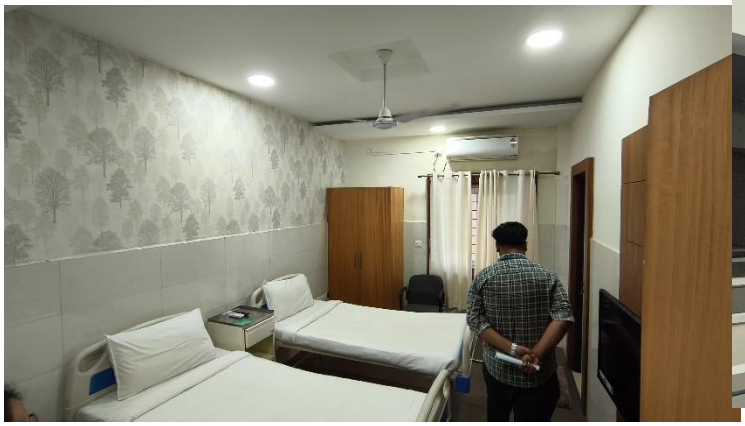

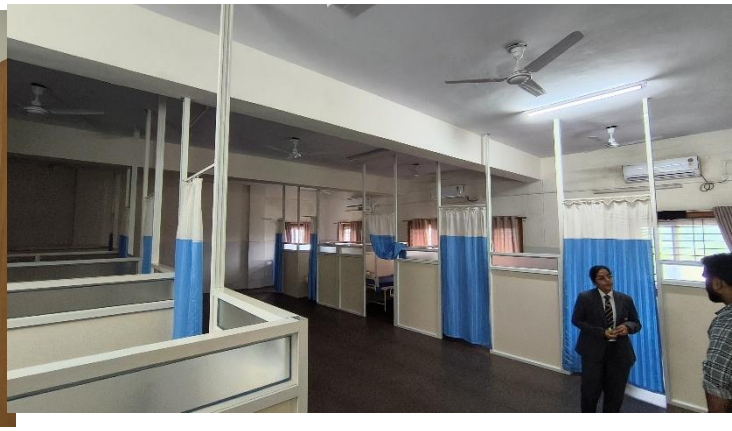

FUNCTIONAL ZONING & PLANNING
Main Zones:

1. **OPD & Panchakarma Therapy Block**
2. **IPD / Wards**
3. **Academic Block**
4. **Administrative Section**
5. **Pharmacy & Herbal Medicine Processing Unit**
6. **Herbal Garden**
7. **Kitchen & Dining Area**
8. **Residential Quarters**

CIRCULATION STRATEGY:

- Separate patient, staff, and service movement.
- Central courtyard flanked by OPD and IPD blocks.
- Covered corridors for protection from sun and rain.

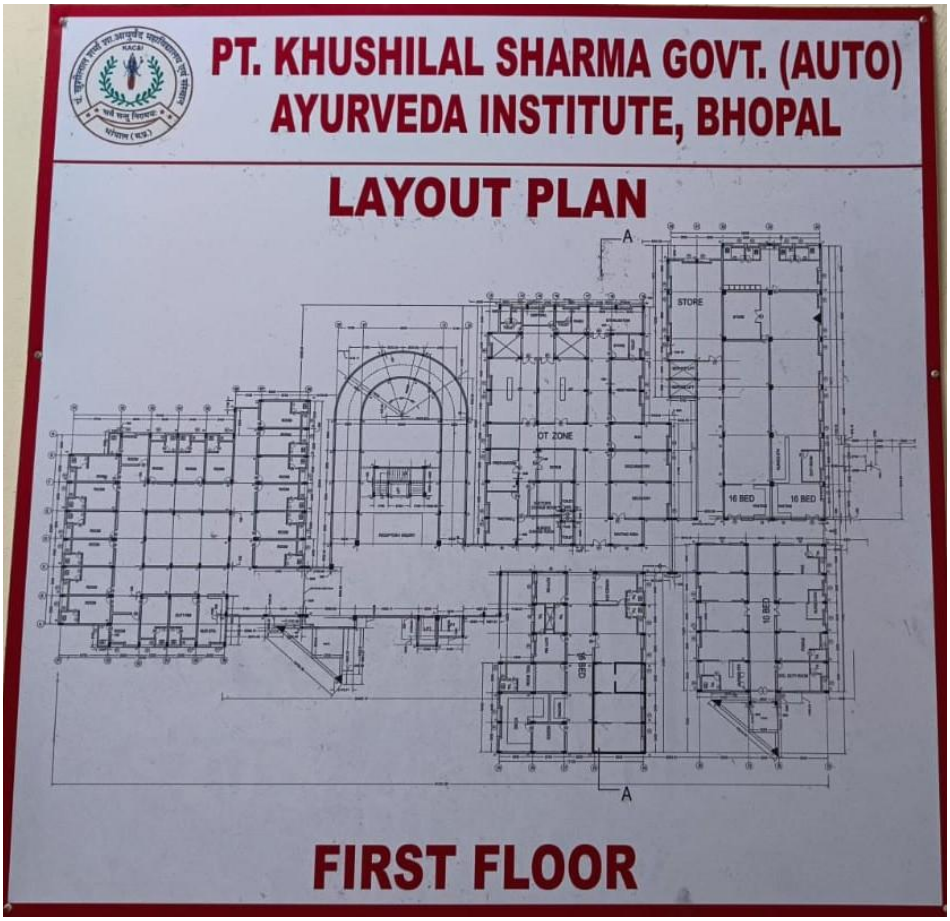



The infrastructure of the hospital is divided into the following major functional blocks:

a. Outpatient Department (OPD) Block

The OPD block functions as the primary interface between the hospital and the public. It comprises consultation rooms for general and specialized Ayurvedic practitioners, a diagnostic and pulse examination area (Nadi Pariksha), patient registration counters, a waiting lounge, and an Ayurvedic pharmacy for medicine dispensing. The design ensures a smooth flow of patients, with logical transitions from waiting areas to consultation and treatment zones.

b. Inpatient Department (IPD) and Wards

The inpatient block accommodates approximately **100 beds**, distributed across general wards, semi-private rooms, and private suites. Each ward is supported by nurse stations, patient toilets, storage areas, and rest zones for caregivers. The IPD design prioritizes ventilation, daylight access, and hygiene, with spatial arrangements that promote privacy, restfulness, and proximity to therapy units.

c. Panchakarma Therapy Unit

One of the most distinctive components of the hospital is the Panchakarma therapy zone, dedicated to traditional Ayurvedic detoxification and rejuvenation treatments. This unit comprises treatment rooms equipped for therapies such as Abhyanga (oil massage), Swedana (herbal steam bath), Shirodhara, Nasya, Basti (medicated enema), Vamana (therapeutic emesis), and Lepa (herbal paste application). Supporting infrastructure includes shower rooms, recovery lounges, changing rooms, and storage for therapeutic oils and materials. Each room is acoustically and climatically optimized for patient comfort during treatments that can last for extended durations.

d. Academic and Institutional Block

The academic wing of the hospital campus is designed to facilitate undergraduate and postgraduate education in Ayurvedic medicine. It includes lecture halls with tiered seating, well-equipped practical laboratories, a digital and print library, seminar rooms, tutorial spaces, and faculty offices. The block operates independently but remains spatially linked to the hospital to encourage real-time clinical learning.

e. Herbal Garden and Botanical Landscape

A central feature of the campus is the **extensive herbal garden**, cultivated with over 200 species of medicinal plants used in Ayurvedic treatments. This garden serves both therapeutic and pedagogical purposes, offering a live learning environment for students and a tranquil, nature-integrated experience for patients. Walking paths, information boards, shaded seating zones, and water features are incorporated into the garden design to enhance usability and comfort.

f. Ayurvedic Pharmacy and Research Unit

The pharmacy block functions as a small-scale pharmaceutical production unit where herbal formulations, medicated oils, and traditional decoctions are prepared, packaged, and dispensed. This facility also supports ongoing research in Ayurvedic pharmacology and

herbal medicine standardization, with separate zones for raw material storage, processing, quality control, and clinical trials.

g. Administrative and Service Infrastructure

The administrative zone houses offices for hospital management, medical records, accounts, human resources, and scheduling. Adjacent to this block are utility services such as electrical control rooms, water supply units, sanitation blocks, and waste management systems—ensuring uninterrupted hospital operations.

h. Residential Quarters and Dining Facilities

Staff and student accommodations are provided through dedicated residential blocks that include hostel rooms, family quarters, and guest housing. These are complemented by a centralized dining facility and a “Satvik” kitchen that prepares food adhering to Ayurvedic dietary principles. The kitchen is sometimes integrated with patient treatment plans, offering therapeutic diets prepared under medical supervision.

i. Wellness and Recreational Facilities

In alignment with Ayurvedic principles that emphasize mental as well as physical well-being, the hospital campus includes a Yoga and Meditation Hall. This facility is used for therapy sessions, wellness workshops, and spiritual education, and is architecturally designed to offer a serene, contemplative environment.
























DESK CASE STUDY 1- PATANJALI YOGPEETH, HARIDWAR

INTRODUCTION

Patanjali Yogpeeth in Haridwar, Uttarakhand, is one of the largest yoga institutes in India, named after the Rishi Patanjali. The institute is Baba Ramdev's flagship project. Its purpose is to practise, research and develop the field of ayurveda, as well as manufacture ayurvedic medicines. It is also the home of the University of Patanjali. Acharya Balkrishna is the General Secretary of Patanjali Yogpeeth.



LOCATION:

Located on the Haridwar-Delhi highway at, very near to Roorkee, Patanjali Yogpeeth offers treatments for all and has residential accommodation. Patanjali Yogpeeth is about 20 km from Haridwar at Kankhal and about 15 km from Roorkee.

- Inaugurated in - 2006
- Founded by - Swami Ramdev and Acharya Balkrishna



Patanjali Yogpeeth - I

Patanjali Ayurveda College. In 72010, this study and research facility was commissioned as part of the university and has 122 students as of 2013. Inside the Campus library is a special area dedicated to the research of yoga and Ayurveda. Various ancient books are being restored and digitized.

Patanjali Yogpeeth - II

This second Yogpeeth campus was inaugurated in April 2009.

Yog Bhavan Patanjali is a huge auditorium of 200,000 sq. ft. where thousands of participants practice yoga, pranayama, and meditation together.

Shridhara is a 60,000 sq. ft. air-conditioned auditorium.

Panchakarma & Shatkarma Centre is a 40,000 sq. ft. centre where up to about 1,000 people can perform and participate in panchakarma and shatkarma therapy.

- **O.P.D:**

The O.P.D. is a part of Patanjali Ayurveda Hospital which is attached with Patanjali Bhartiya Ayur Vigyan avam Anusandhan Sansthan (Patanjali Ayurveda College). Patanjali Ayurved Chikitsalaya has world's largest O.P.D. of capacity of six to ten thousand patients per day. Thirty-four well equipped chambers have been arranged to sit Vaidyas (Ayurveda charya / B.A.M.S./ M.D. doctors), on the ground floor of Block-A (Sadhbhawna) of Patanjali Yogpeeth-I.

The O.P.D. has following seven sections:

1. Kaya Chikitsa

2. Stri Avam Prasuti Rog

3. Bal Roga OPD

4. Shalya

5. Shalakya

6. Panchakarma

7. Swasthya Rakshan



Computerised registration facility has been made inside the O.P.D. to maintain records of patients for long time and thereby conduct Ayurveda research. Presently around two thousand patients of different incurable &curable diseases visit this O.P.D. every day.

Timing of O.P.D. - Ayurveda

40 able and experienced Vaidyas (Ayurveda charyas/ Doctors having B.A.M.S./ M.D. degrees) render their services in O.P.D.- Ayurveda of Patanjali Yogpeeth- I from 9:00 A.M. to 5:00 P.M. in all seven days of a week.

Consultation with doctors is free. Appointment scheduling option is not here. There are two options either visitor consult with his/her preference or may be as suggested by OPD managers.

- **I.P.D:**

The I.P.D. is a part of Patanjali Ayurveda Hospital which is attached with Patanjali Bhartiya Ayur Vigyan avam Anusandhan Sansthan (Patanjali Ayurveda College). Patients are admitted on the advice of physicians of O.P.D.

The 100 beds I.P.D. has been divided into following three wards:

(a) General Ward

(b) Semi Private Ward

(c) Private Ward

As per the CCIM norms the I.P.D. includes six departments i.e.

1. Kaya Chikitsa

2. Panchakarma

3. Bal Roga

4. Shalya

5. Stree Avam Prasooti Roga

6. Shalakya

SUN AND WIND PATH



- Patanjali Yogpeeth has only one **entry and exit.**
- **Parking**







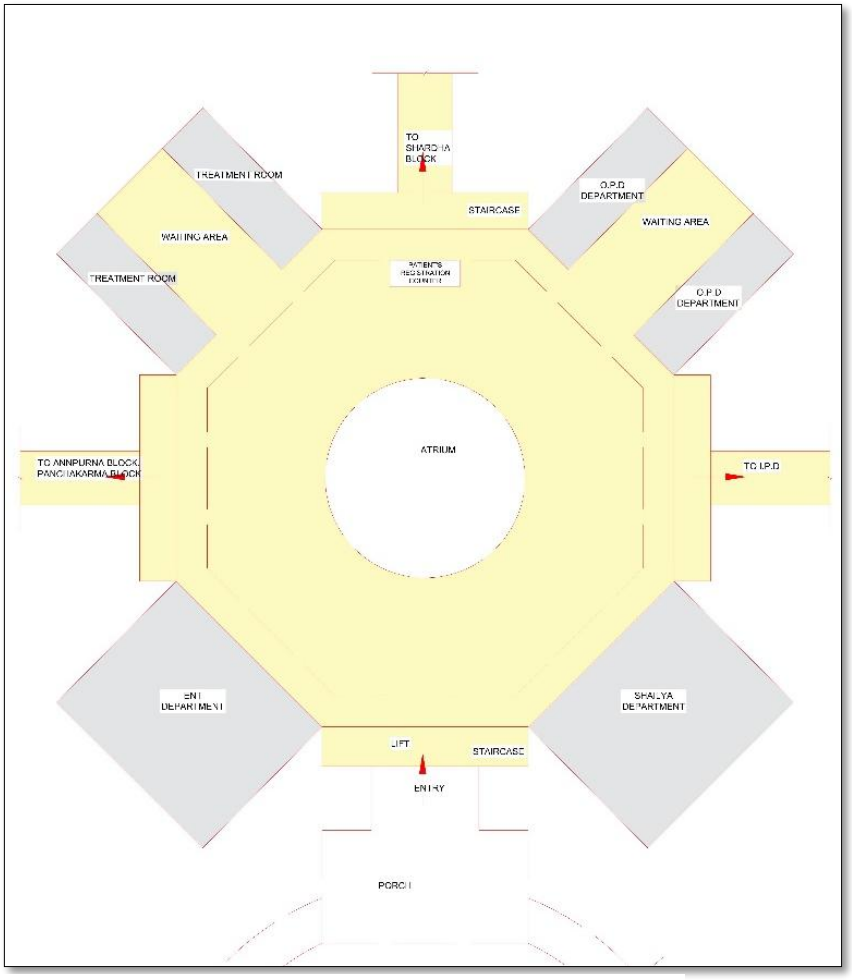

Figure 4 Ground Floor Plan



Figure 3 Registration Counter



-

- The registration counter is under the skylight with the waiting area in its front.
- The **ground floor** has-
  ENT Department

  SHAILYA (SURGERY)

  OPDs

  Treatment rooms.
- The service core is at front and backside of the octagon.


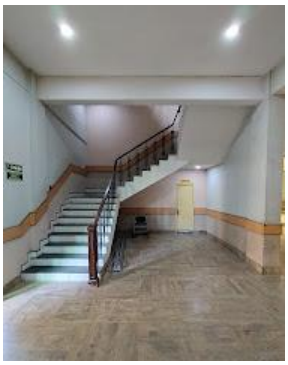

Ground Floor has **3 connecting corridors** which connects the hospital block with Annapurna(cafeteria), Panchkarma, Shardha Block and the IPD.



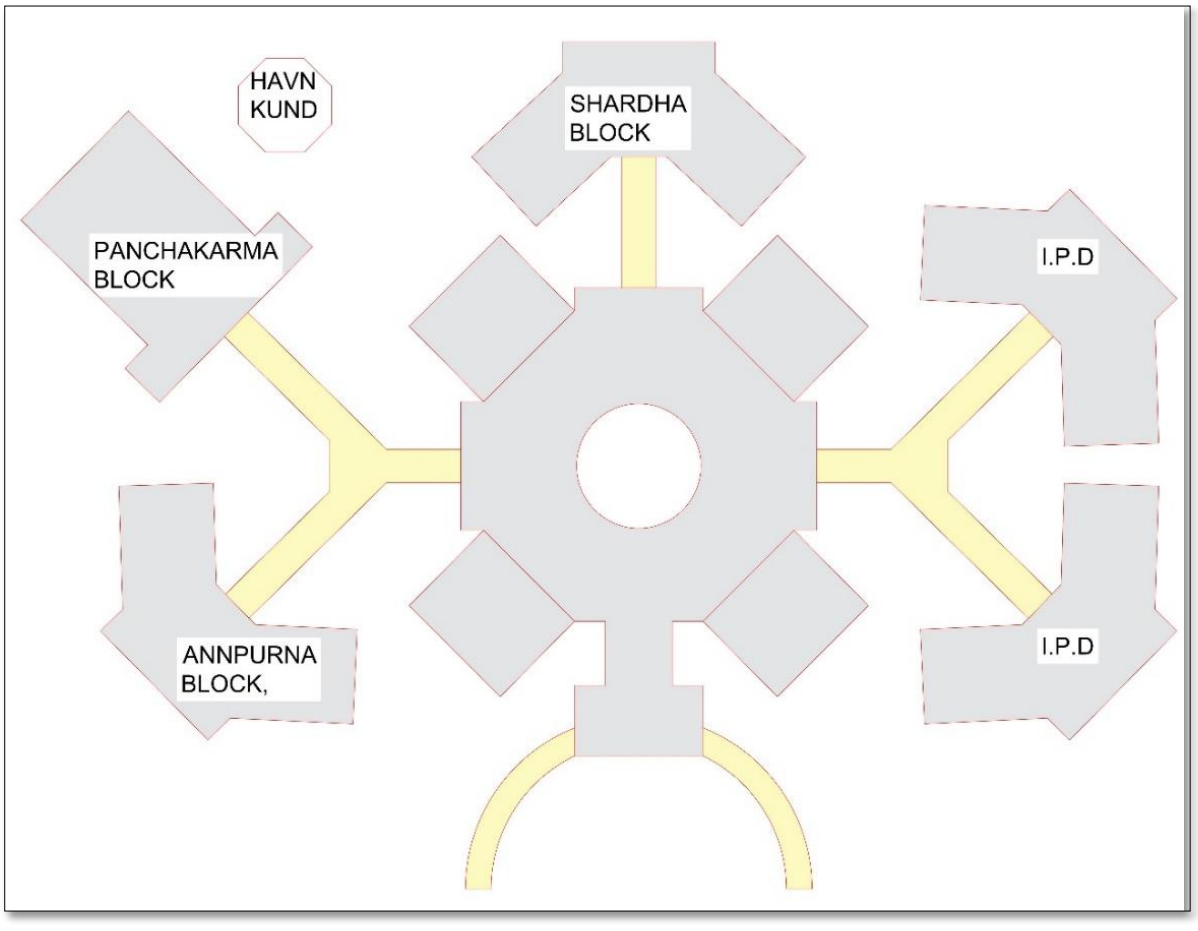
HAVN
KUND
SHARDHA
BLOCK
PANCHAKARMA
BLOCK
I.P.D
ANNPURNA
BLOCK,
I.P.D









The First floor has:

- Pathology Research lab
- Dental
- IT Computer lab
- ECG
- Ultrasound
- Dental clinic

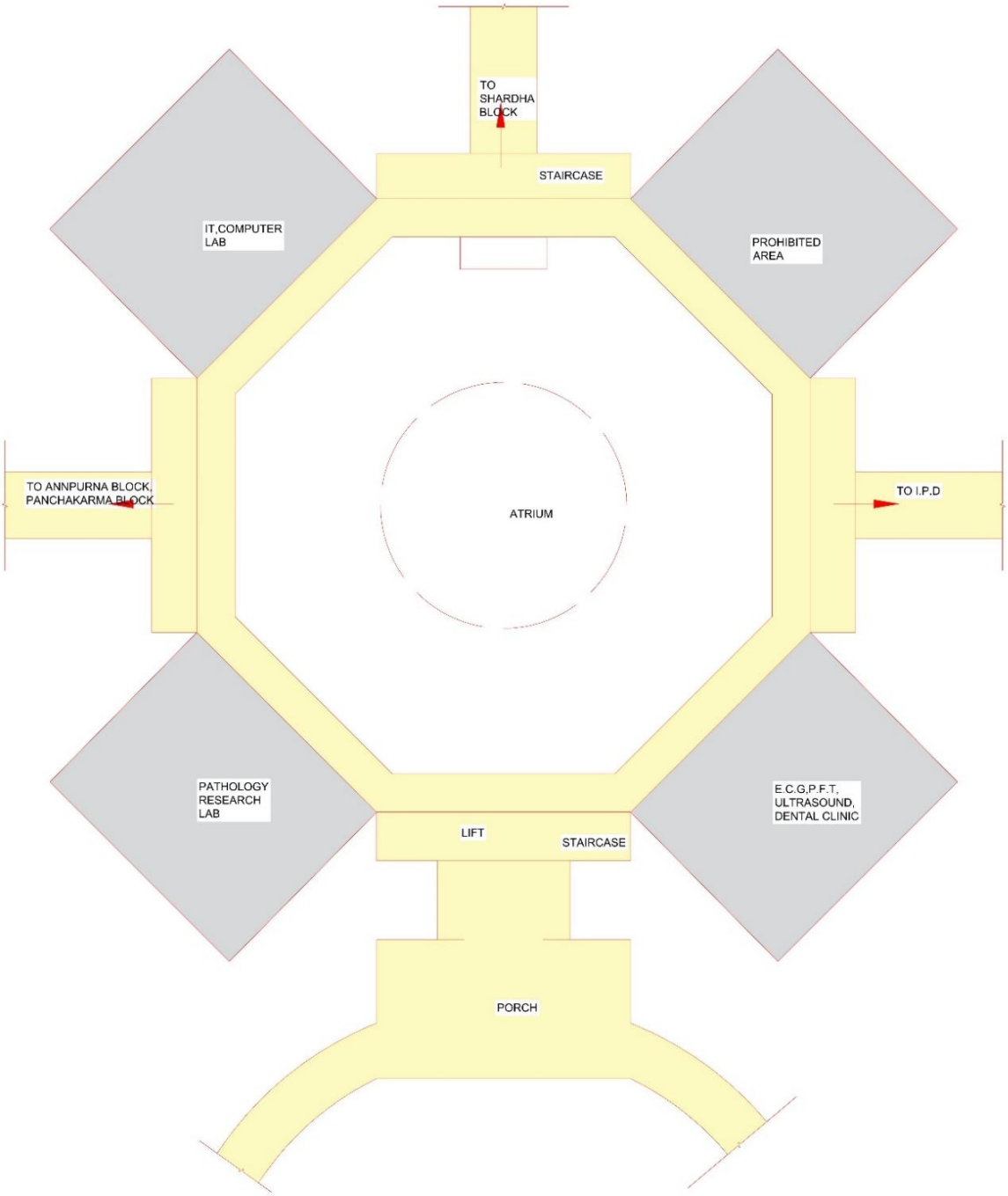

Facilities provided:

- 24 hrs. availability of the Resident Medical Officer & M.Os. under the guidance of Medical Superintendent.
- Well experienced Nursing staff and ward boys.
- Computerised registration facility.
- Routine pathological examination.
- Hygienic Food/ Juice/ Milk as per advice of physician.

Physiotherapy Centre:

- A well-equipped Physiotherapy Centre has been established on first floor of Sadhana Block of Patanjali Ayurveda Hospital. All the required equipments related to Physiotherapy are available here. Patients suffering from various Inflammatory & degenerative arthropathies like Osteo Arthritis, Rheumatoid Arthritis, Lumber Spondylitis, Cervical Spondylitis, Prolapsed Intervertebral Disc, and other neurological deficits are treated with the combination of Physiotherapy & Panchakarma procedures.
- Through various Physiotherapy procedures we help every patient to achieve optimal recovery from pain & discomfort. The focus is to improve functional movements, activities of daily life and to enhance the overall quality of life through:
- Alleviating pain & discomfort.
- Promoting healing process
- Restoring and enhancing functional mobility and motor strength.
- Identifying & treating causes of pain, discomfort, and disability.

Maximizing & developing independence.

To make ground for an accurate diagnosis and most appropriate & scientific treatment, the case history of every patient is studied thoroughly by the Physiotherapist. The treatment is planned in such manner that not only relieves pain & restores function but also resolves physiotherapy the underlying cause of the problem. Our approach towards the treatment is based on a combination of electrotherapy & exercise therapy in the exercise therapy we are delivering exercises along with manual therapy i.e. mobilization therapy by the highly trained therapists. Mobilisation therapy is used to treat joint dysfunction. To make the treatment more effective & long lasting, we lay emphasis on patient education & home management program by being in close co-ordination with patients. Patanjali Yogpeeth has achieved miraculous results in several chronic conditions with the help of Yoga and Ayurveda. Adding Physiotherapy in that path of Yogic & Ayurvedic treatment will enhance the possibilities of getting more and more of good results and satisfaction in patients' prognosis.

EQUIPMENTS AVAILABLE:

1. Interferential Therapy

2. Short Wave Diathermy

3. Ultra Sound

4. Trans Cutaneous Electric Stimulation

5. Muscle Stimulator

6. Moist Heat Therapy

7. Wax Bath

8. Traction

Besides these, other motor training excersing equipments like Physio-Gym-Boll, Shoulder Exerciser, Heel Exerciser, Wrist Exerciser, Cycle Exerciser, Quadriceps Table and Sensory and Perceptual Motor training equipments like Dressing Frames, Supinator and Pronators, Tactile Numerical Kit, Mushroom Board, Pags & Shapes, Equilibrium Board are also available. New dimensions to Medical Science of Yoga & Ayurveda envisaged and introduced by our great sages are added day and day in Patanjali Yogpeeth for holistic health pursuits. Easy to access Shatkarma Clinic & Research Centre for people in general has established recently, where following modified natural Shat-karma (six-karmas) are practiced to purify human body and mind:

1. Kunjara Kriya

2. Jal Neti

3. Sutra Neti

4. Shankha Prakshalam

5. Trataka

6. Yoga-Nindra

7. Acupressure

8. Steam

Trataka: Incurable diseases like eye disorders, less concentration, insomnia, and epilepsy are successfully treated by this activity of Shat-karma. Gaze/concentration is advised on a diya of desi ghee or a candle fitted on a stand, which is in turn, helpful in eradicating concerned diseases from our body.



Yoga-Nidra (Savasana): It is quite useful in treatment of incurable diseases like hypertension, C.A.D., insomnia & other mental disorders. Healthy mind is prelude for a healthy body. Synchronizing of body, mind & spirit in the process of Yoga-nidra, helps curing fatal diseases.

Size of lobby: 30’ x 20’

One male and one female receptionist is compulsory to guide the patient inside the treatment area.

The treatment area is divided into male and female section whose entrance lies on both sides of the reception table i.e., exactly opposite to each other.

Width of corridor inside the treatment area with 8 chairs for waiting patients is 6’-0”

Therapy rooms:

A total of five therapy rooms are there.

Size of therapy rooms: 8’-0”x12’-0” and 8’-0”x15’-0”

The provision of changing room and toilet is compulsory in the individual therapy rooms.

Canteen:

Variety of food items, snacks and sweets made from pure desi ghee and organic food grains, in a well-equipped canteen in hygienic conditions, are served to visitors. This canteen is situated in the Annapurna Block of Patanjali Yogpeeth.







DESK CASE STUDY 2- ARYA VAID SALA KOTTKAL AYURVEDIC HOSPITAL AND RESEARCH CENTRE, DELHI.

INTRODUCTION

Arya Vaidya Sala, Kottak Kal (AVS) is a century old Charitable Institution engaged in the practice and propagation of Ayurveda, the ancient health care system of India. AVS offers classical Ayurvedic medicines and authentic Ayurvedic treatments and therapies to patients





from all over India and abroad.

60 bedded treatment centres, treatment is done through traditional ayurvedic system of healing having oil and massage and the centre has OPD's for consultation by ayurvedic doctors, physicians, and therapists.

LOCATION

Location - plot number-18x & 19x institutional area, near railway reservation centre, karkardooma, New Delhi.

It has three **entry** gates.



SITE PLAN

The site is planned with the concept of courtyard planning.
Rooms are placed along the central court which allows natural light to enter inside and enhances the ventilation.
After the entrance, Parking and some sitting spaces are provided at the right side.
Drive way is provided at the periphery of the site.
The whole design is done by using geometric shapes.
The sloping roofs, chajjas and the materials used clearly represents the architecture of kerala.

PLANNING

The old building has two connected blocks with three courtyards which helps in good ventilation of the building in the hot climate of Delhi and openness in built form for better air quality the new building has treatment rooms on the ground floor and all accommodation on second and third floor. The building has parapets with planters having climbers and other plants to have greenery inside the building. Services, common toilets, lifts, service lifts, fire stairs, fire shaft, electrical.



Old building block



The new building has treatment rooms on the ground floor and all accommodation on second and third floor. The building has parapets with planters having climbers and other plants to have greenery inside the building. Services, common toilets, lifts, service lifts, fire stairs, fire shafts and electrical rooms.

New building block

New block - has treatment rooms on the ground floor and accomodation on the first and the second-floor yoga and meditation room storage for equipment for treatment store for ayurvedic medicines with service lift to transport them directly to the dispensary nursing station and staff rooms duty rooms for doctors office with stairs from reception



Existing GF plan

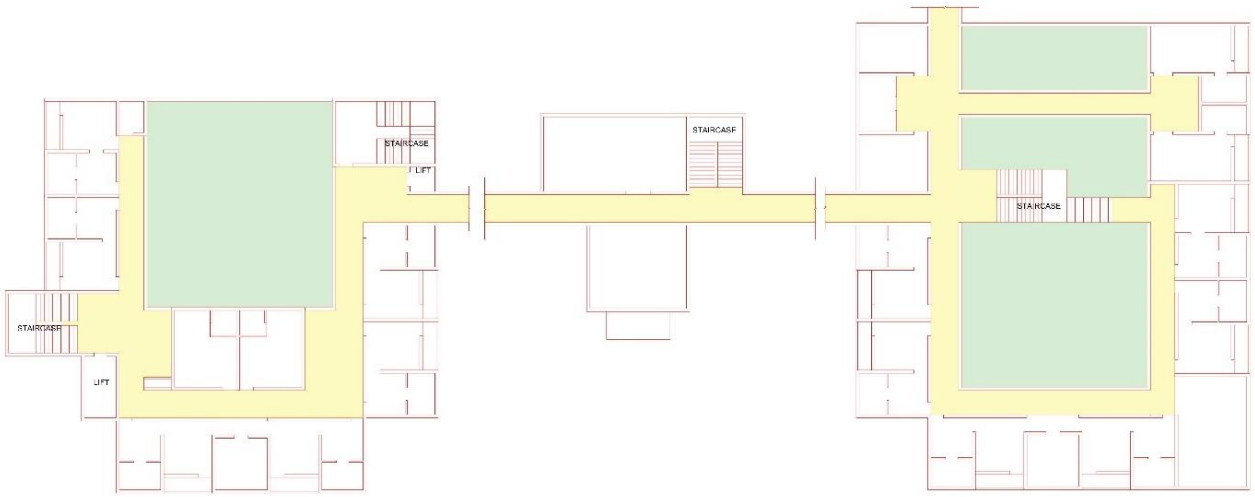

Existing FF plan



Circulation Pattern











For specially abled



Single room

REFERENCE

HOSPITAL DESIGN & AREA STANDARDS

Books & Manuals:

- Neufert, Ernst. *Architects' Data*. Wiley-Blackwell.
- DeChiara, Joseph, Panero, Julius, & Zelnik, Martin. *Time-Saver Standards for Building Types*. McGraw-Hill Education.
- Ching, Francis D.K. *Architecture: Form, Space, and Order*. Wiley.
- Koenigsberger, O.H. *Manual of Tropical Housing and Building*. Orient Blackswan.

Indian Standards & Government Guidelines:

- National Building Code of India 2016 (NBC). Bureau of Indian Standards (BIS). Website: https://bis.gov.in
- Indian Public Health Standards (IPHS). Ministry of Health & Family Welfare. Website: https://dghs.gov.in/IPHSStandards.aspx
- Handbook on Planning and Design of Hospitals. Central Public Works Department (CPWD), Government of India. Website: https://cpwd.gov.in

Ministry of AYUSH Guidelines:

- Guidelines for Establishment of Ayurveda Hospitals and Colleges. Ministry of AYUSH, Government of India. Website: https://ayush.gov.in

---

2. Site Analysis, Climate, and Topography (Shahdol, M.P.)

Climatic Data Sources:

- Indian Meteorological Department (IMD). Climatological Normals 1981–2010 for Shahdol. Website: https://mausam.imd.gov.in

- NASA POWER (Prediction of Worldwide Energy Resources) Data Access Viewer.
  Website: https://power.larc.nasa.gov
- World Bank Climate Change Knowledge Portal.
  Website: https://climateknowledgeportal.worldbank.org

Topography & Terrain:

- Survey of India Toposheets.
  Website: https://surveyofindia.gov.in
- ISRO Bhuvan Geoportal.
  Website: https://bhuvan.nrsc.gov.in
- Google Earth Pro.
  Website: https://www.google.com/earth/

---

3. Case Studies of Ayurvedic Hospitals

Primary Case Study:

- Pandit Khushilal Sharma Government Ayurveda Hospital, Bhopal
  Website: https://pkshayurvedcollege.in

Other Referenced Institutions:

- All India Institute of Ayurveda (AIIA), New Delhi
  Website: https://aiia.gov.in
- Government Ayurveda College Hospital, Thiruvananthapuram
  Website: https://www.gactvm.org

---

4. Water Supply, Rainwater Harvesting & Plumbing

- Manual on Water Supply and Treatment. CPHEEO, Ministry of Urban Development.
  Website: https://cpheeo.gov.in
- NBC 2016 – Part 9: Plumbing Services.
  Website: https://bis.gov.in
- Rainwater Harvesting Guidelines. Central Ground Water Board (CGWB).
  Website: https://cgwb.gov.in

---

5. Medicinal Plant Landscape & Ayurveda Integration

- National Medicinal Plants Board (NMPB). Guidelines for Planning Ayurvedic Gardens.
  Website: https://nmpb.nic.in
- Chopra, R. N. *Glossary of Indian Medicinal Plants*. Council of Scientific and Industrial Research.
- World Health Organization (WHO). *Traditional Medicine Strategy 2014–2023*.
  Website: https://www.who.int

---

6. Thesis Documentation, Formatting & COA Guidelines

- Council of Architecture (COA). Thesis Guidelines for B.Arch.
  Website: https://www.coa.gov.in
- University Grants Commission (UGC). Guidelines for Academic Writing & Dissertation Structure.
  Website: https://www.ugc.ac.in
- University Format Samples:
  - School of Planning and Architecture, Bhopal: https://spabhopal.ac.in
  - IIT Roorkee, Department of Architecture and Planning: https://www.iitr.ac.in

---

7. Fitness & Nutrition Plan (Weight Loss)

- Indian Council of Medical Research (ICMR) – National Institute of Nutrition (NIN). Indian Dietary Guidelines.
  Website: https://www.nin.res.in
- HealthifyMe. Indian Food Calorie Reference.
  Website: https://www.healthifyme.com
- MyFitnessPal. Nutrition & Calorie Tracker.
  Website: https://www.myfitnesspal.com

---

8. Tools & Software Used

- Autodesk (AutoCAD, Revit, SketchUp).
  Website: https://www.autodesk.com
- Canva, Photoshop, Adobe InDesign – For presentation and layout.
- Google Sheets, Microsoft Excel – For space programming and data visualization.

- ChatGPT (OpenAI) – Content generation, synthesis, and formatting.
  Website: https://chat.openai.com

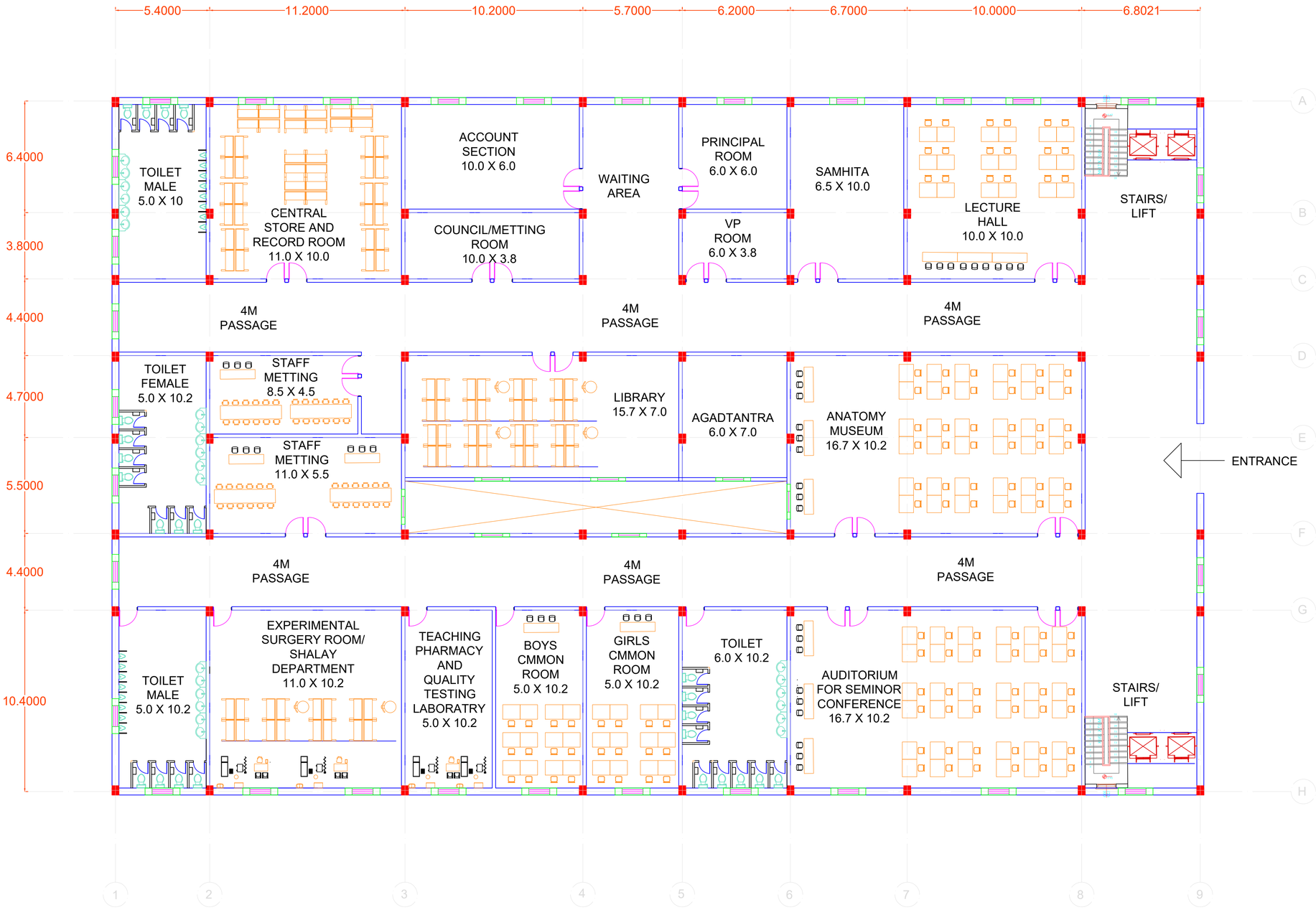

NOTES

SHEET : COLLAGE GROUND FLOOR

PROJECT : AYURVEDIC HOSP. & COLLEGEI

THESIS CO ORDINATOR : PROF. VICKY LALRAMSANGI

NAME : RITESH ANAND SONWANE

SCHOLAR NO. : 211110042

SEMESTER : 9TH

THESIS GUIDE : DR. ASHUTOSH SHARMA

STAGE

N

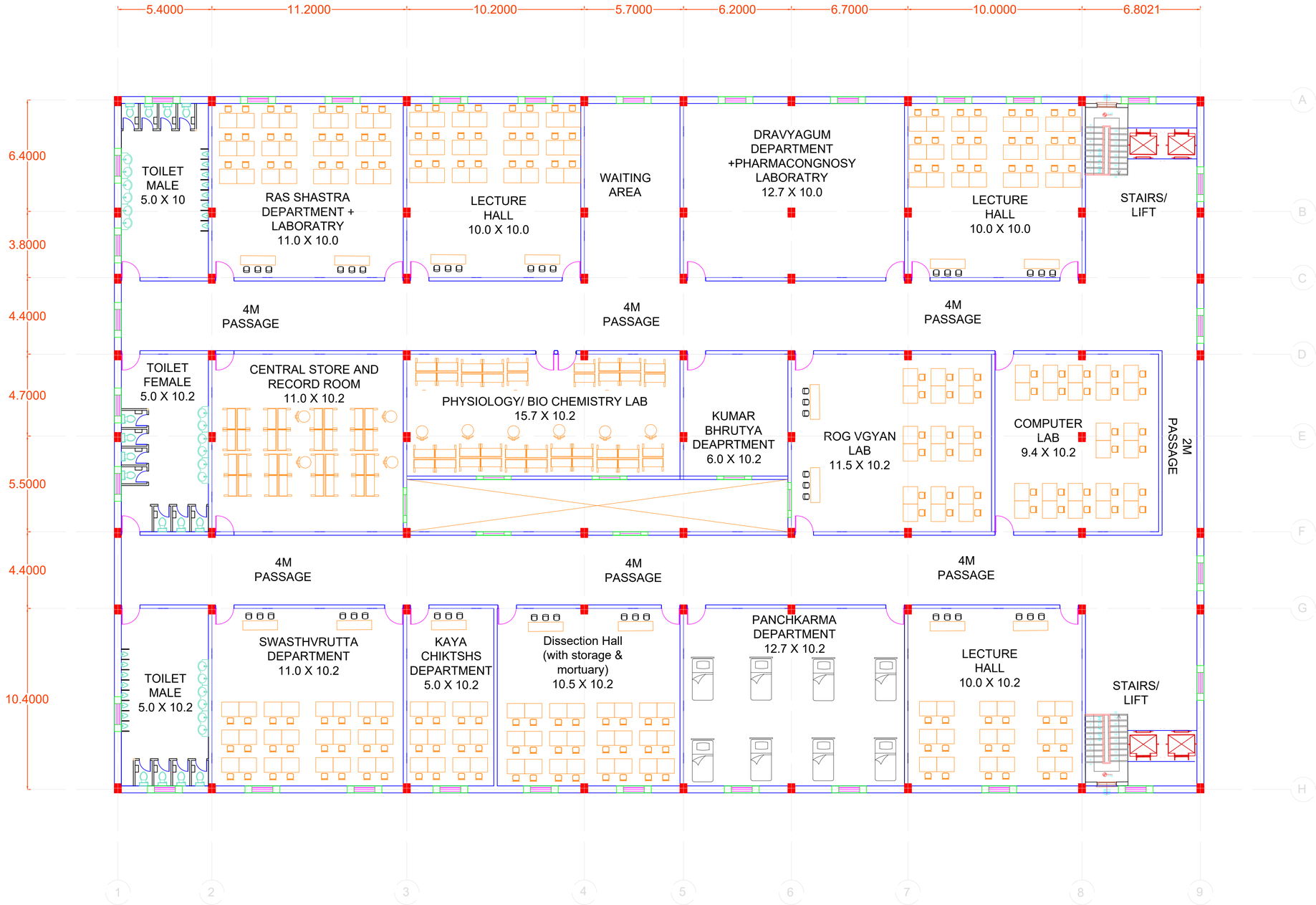

NOTES

SHEET : COLLAGE FIRST FLOOR

PROJECT : AYURVEDIC HOSP. & COLLEGEI

THESIS CO ORDINATOR : PROF. VICKY LALRAMSANGI

NAME : RITESH ANAND SONWANE

SCHOLAR NO. : 211110042

SEMESTER : 9TH

THESIS GUIDE : DR. ASHUTOSH SHARMA

STAGE

N

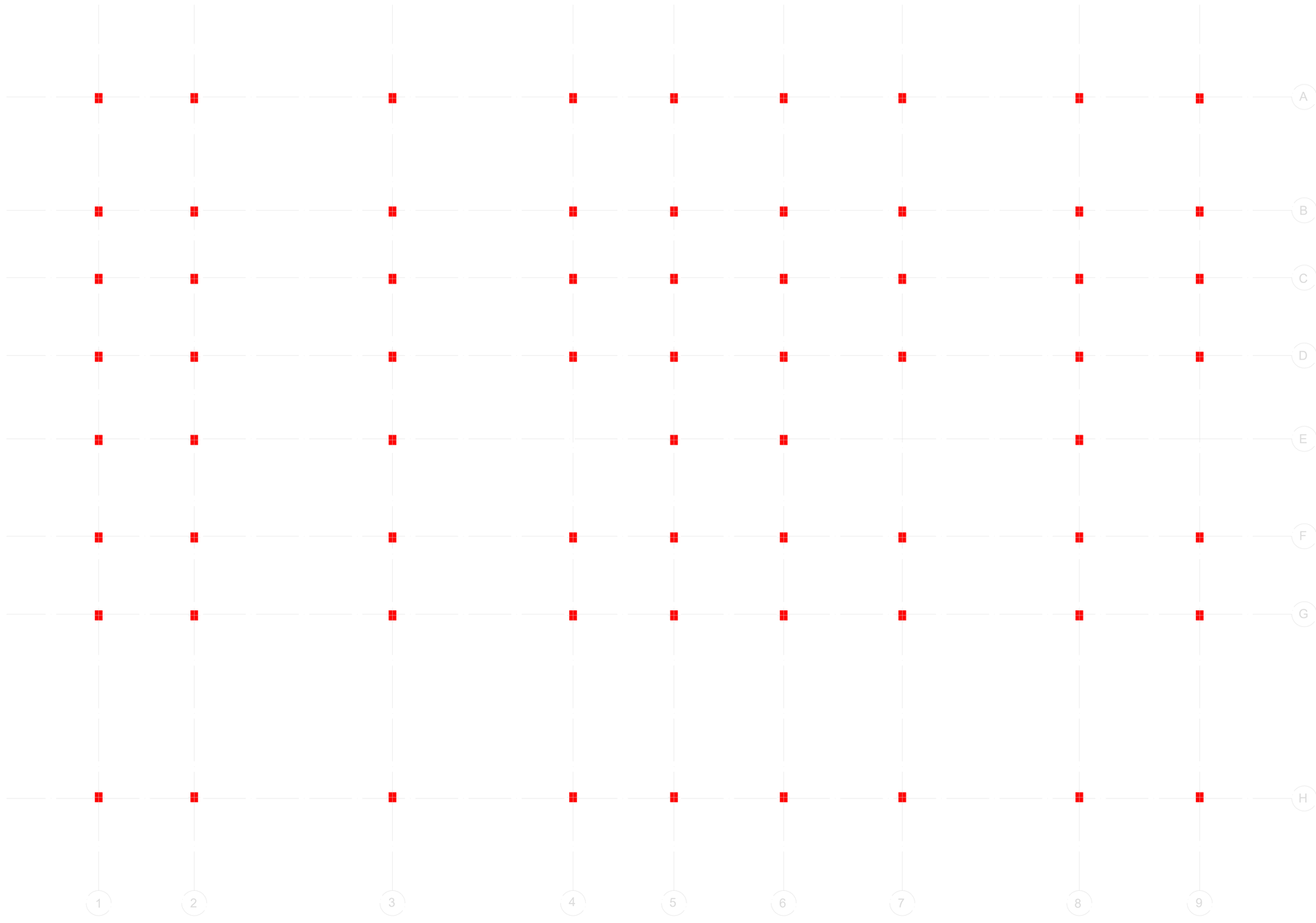

NOTES

SHEET : HOSPITAL COLUMN LAYOUT

PROJECT : AYURVEDIC HOSP. & COLLEGEI

THESIS CO ORDINATOR : PROF. VICKY LALRAMSANGI

NAME : RITESH ANAND SONWANE

SCHOLAR NO. : 211110042

SEMESTER : 9TH

THESIS GUIDE : DR. ASHUTOSH SHARMA

STAGE

N

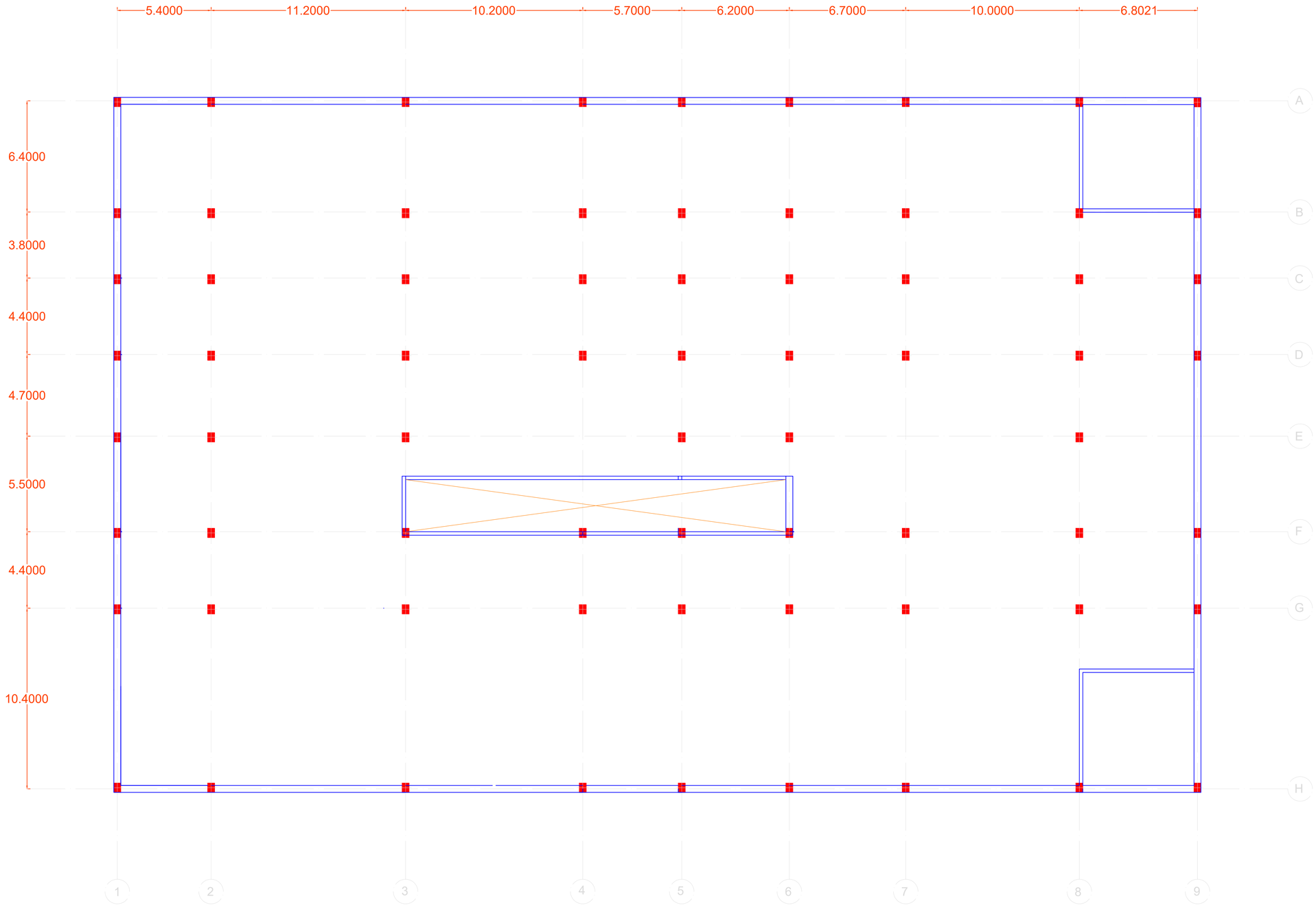

NOTES

SHEET : HOSPITAL TERRACE PLAN

PROJECT : AYURVEDIC HOSP. & COLLEGEI

THESIS CO ORDINATOR : PROF. VICKY LALRAMSANGI

NAME : RITESH ANAND SONWANE

SCHOLAR NO. : 211110042

SEMESTER : 9TH

THESIS GUIDE : DR. ASHUTOSH SHARMA

STAGE

N

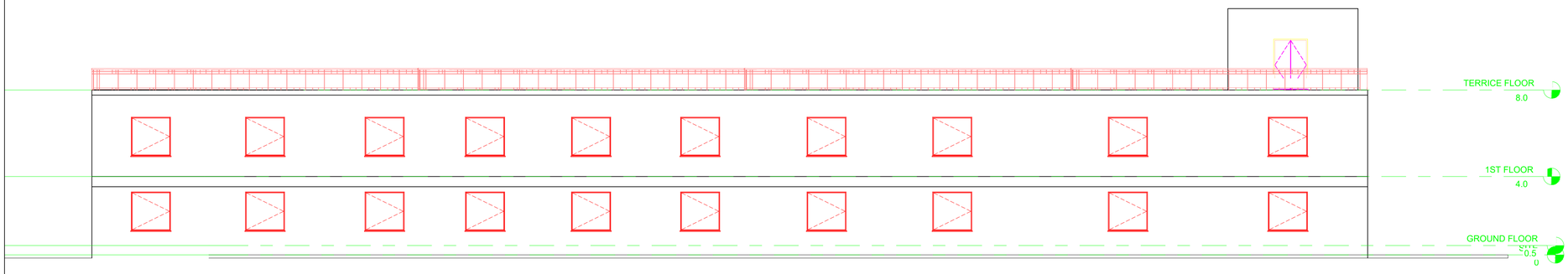

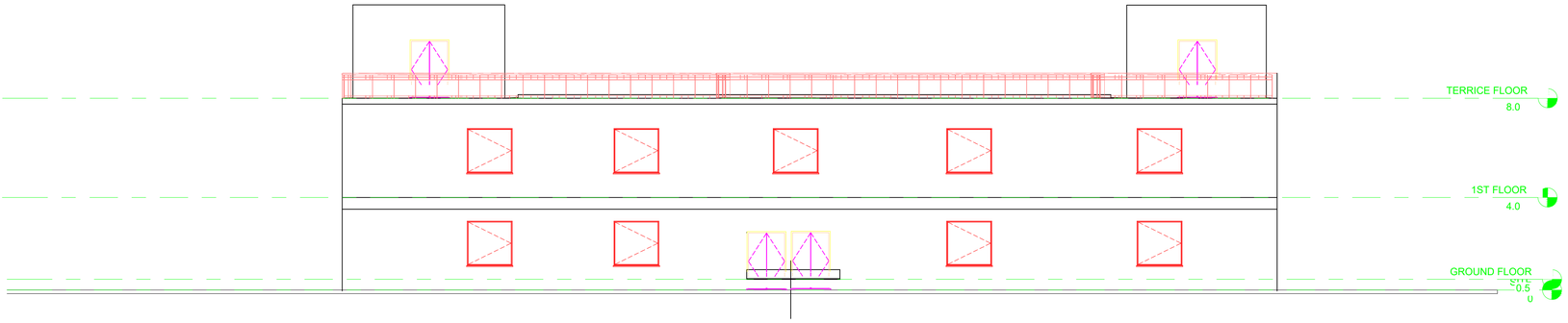

NOTES

COLLAGE ELEVATION

PROJECT : AYURVEDIC HOSP. & COLLEGEI

THESIS CO ORDINATOR : PROF. VICKY LALRAMSANGI

NAME : RITESH ANAND SONWANE

SCHOLAR NO. : 211110042

SEMESTER : 9TH

THESIS GUIDE : DR. ASHUTOSH SHARMA

STAGE

N

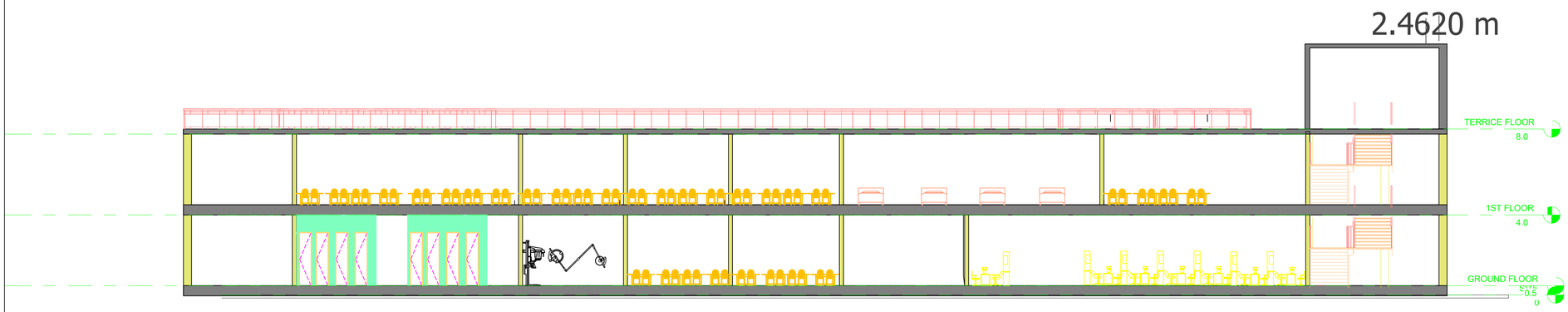

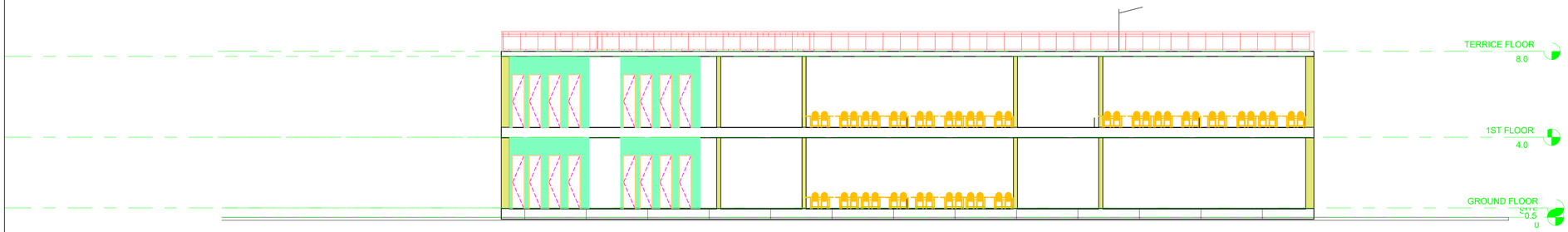

NOTES

SHEET : COLLAGE SECTION

PROJECT : AYURVEDIC HOSP. & COLLEGEI

THESIS CO ORDINATOR : PROF. VICKY LALRAMSANGI

NAME : RITESH ANAND SONWANE

SCHOLAR NO. : 211110042

SEMESTER : 9TH

THESIS GUIDE : DR. ASHUTOSH SHARMA

STAGE

N

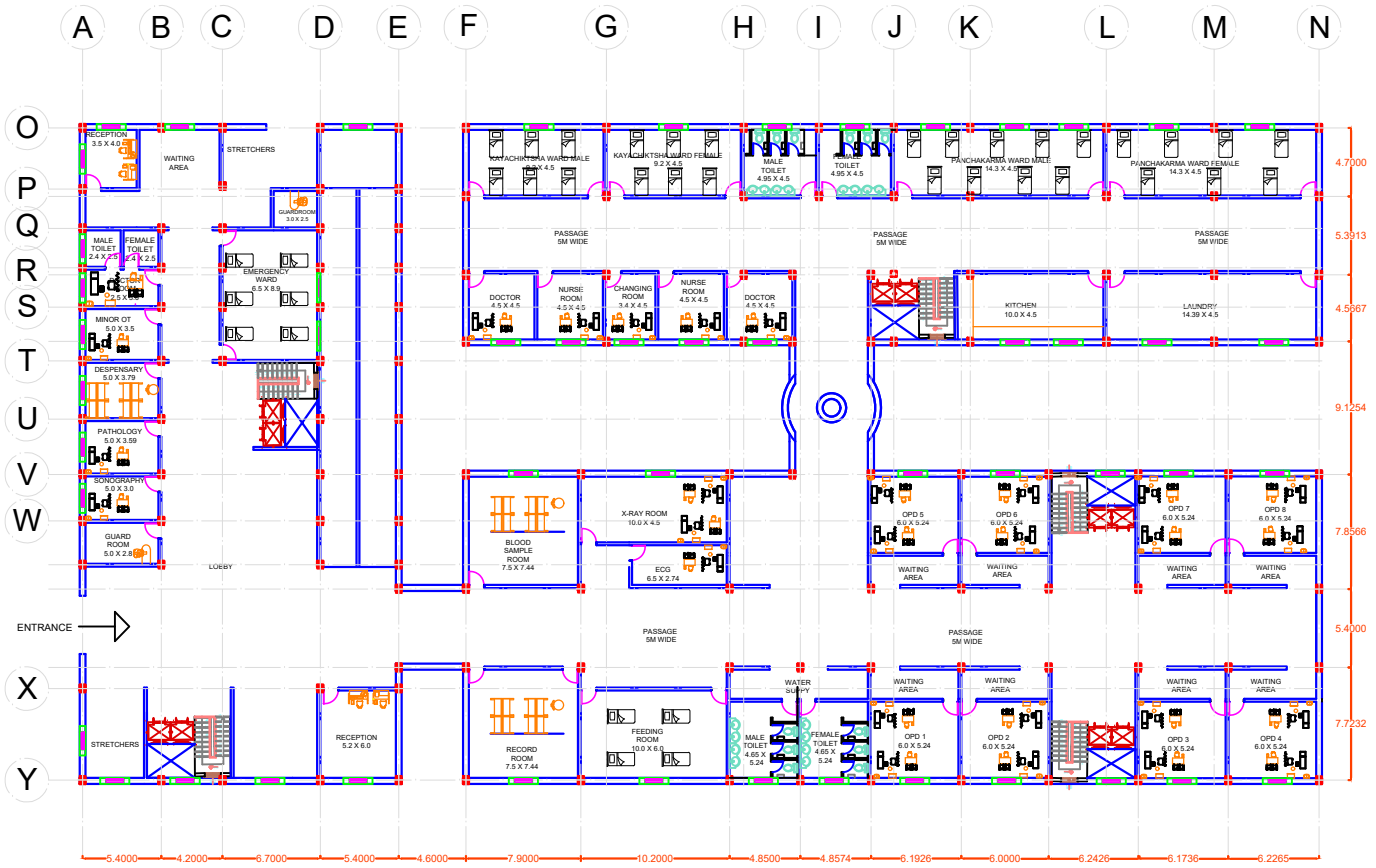

NOTES

SHEET : HOSPITIAL GROUND FLOOR

PROJECT : AYURVEDIC HOSP. & COLLEGEI

THESIS CO ORDINATOR : PROF. VICKY LALRAMSANGI

NAME : RITESH ANAND SONWANE

SCHOLAR NO. : 211110042

SEMESTER : 9TH

THESIS GUIDE : DR. ASHUTOSH SHARMA

STAGE

N

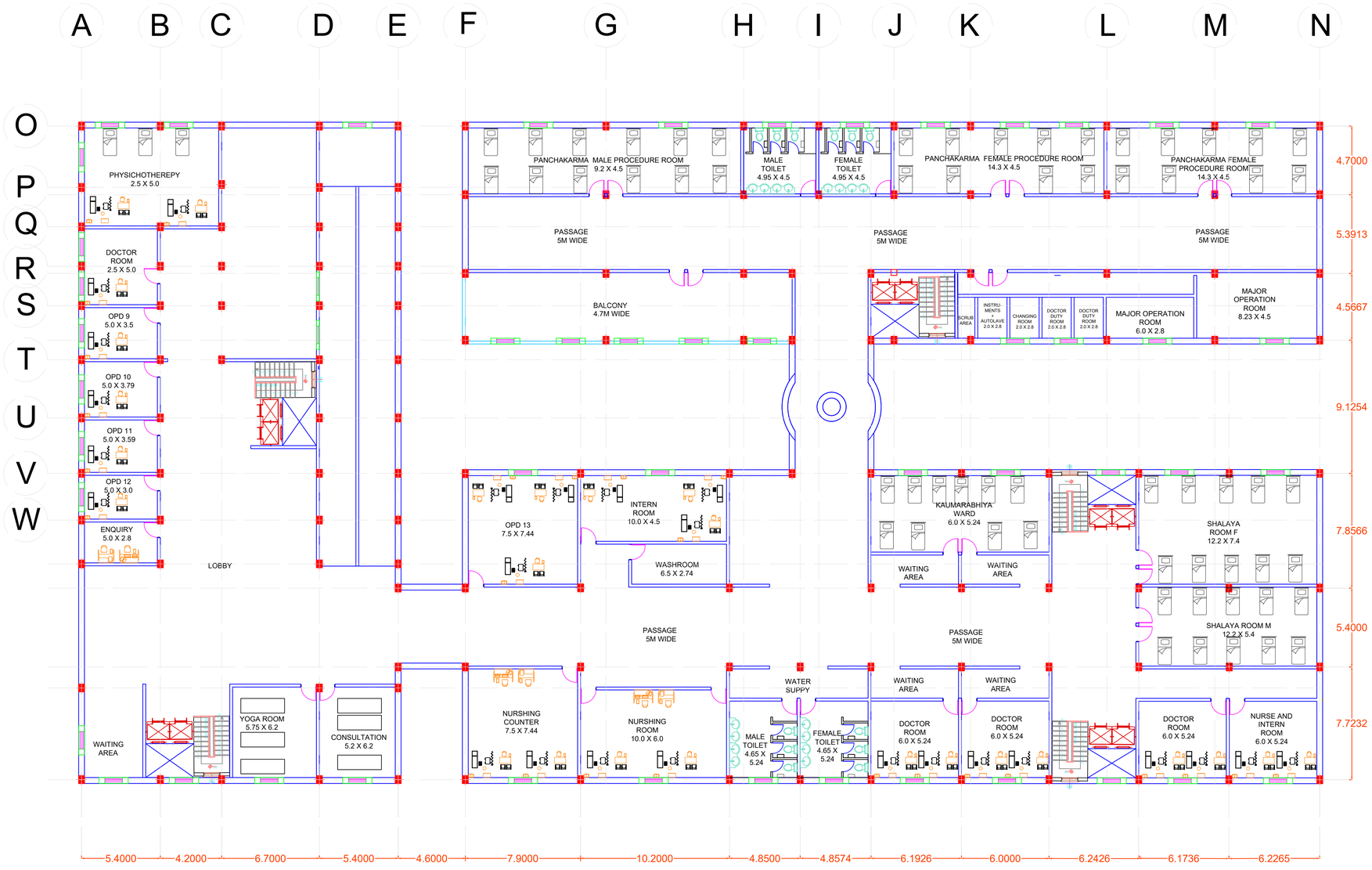

NOTES

SHEET : HOSPITIAL FIRST FLOOR

PROJECT : AYURVEDIC HOSP. & COLLEGEI

THESIS CO ORDINATOR : PROF. VICKY LALRAMSANGI

NAME : RITESH ANAND SONWANE

SCHOLAR NO. : 211110042

SEMESTER : 9TH

THESIS GUIDE : DR. ASHUTOSH SHARMA

STAGE

N

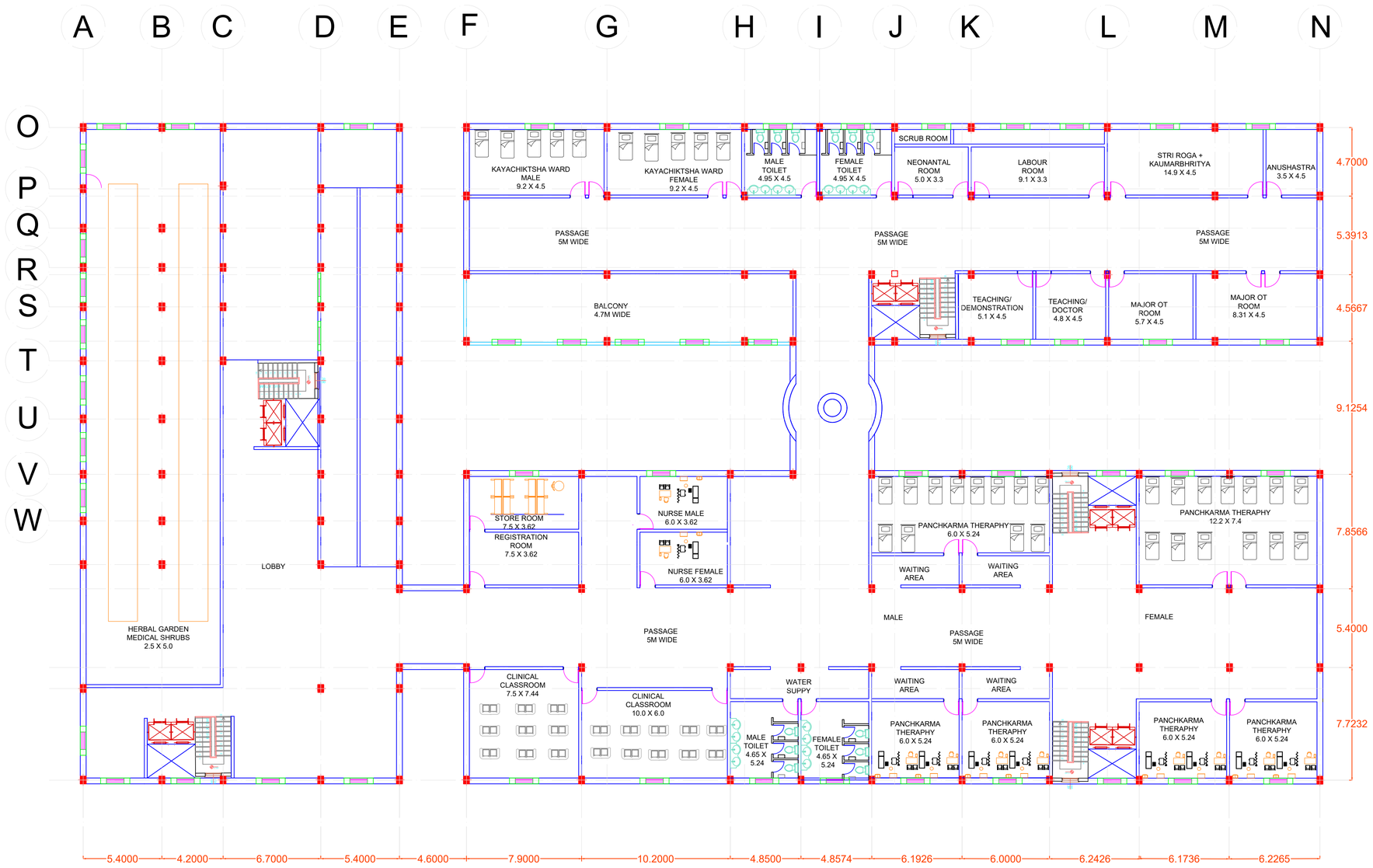

NOTES

SHEET	: HOSPITAL THIRD FLOOR
PROJECT	: AYURVEDIC HOSP. & COLLEGEI
THESIS CO ORDINATOR	: PROF. VICKY LALRAMSANGI
NAME	: RITESH ANAND SONWANE
SCHOLAR NO.	: 211110042
SEMESTER	: 9TH
THESIS GUIDE	: DR. ASHUTOSH SHARMA

STAGE

N

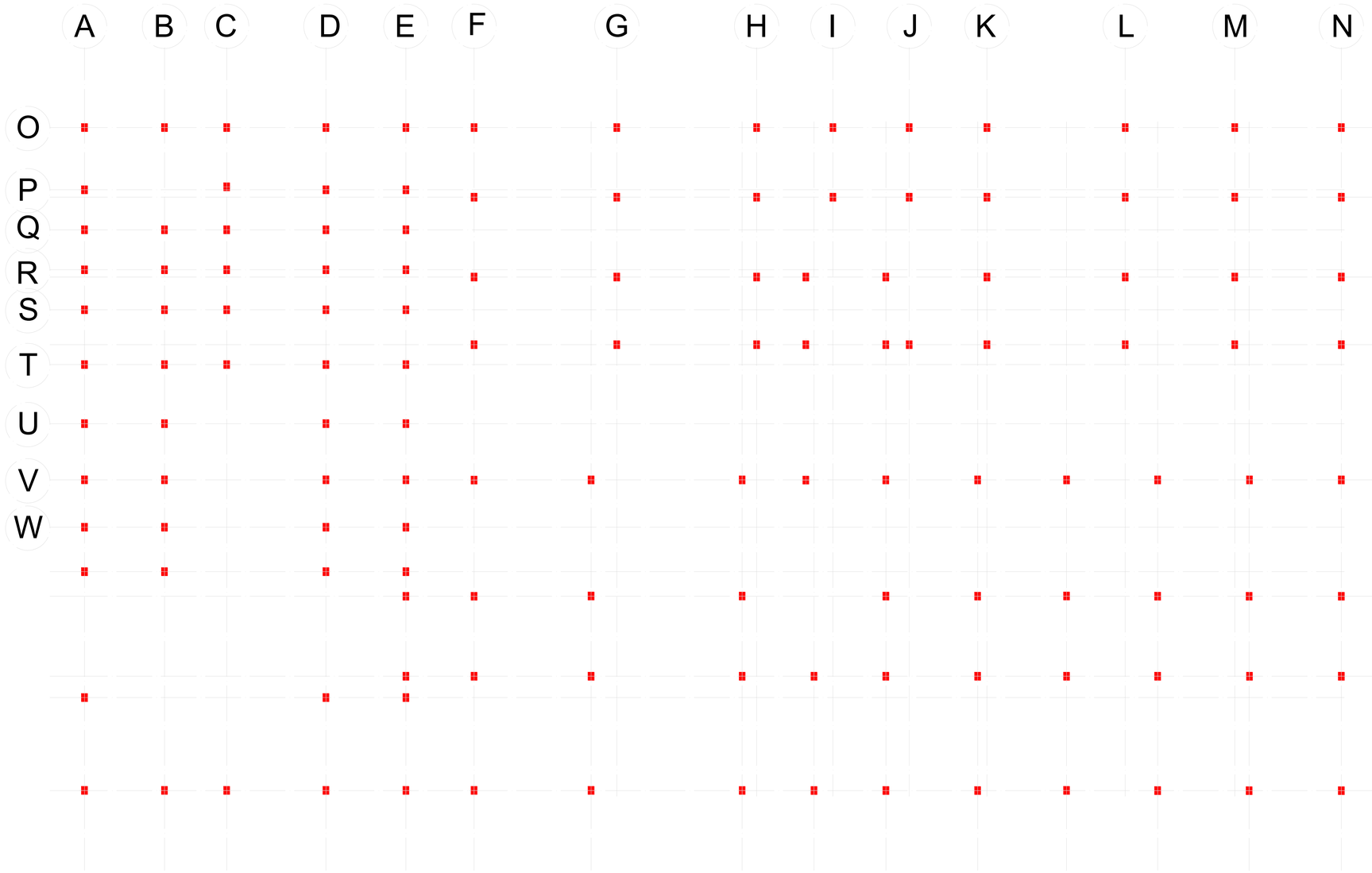

NOTES

SHEET : HOSPITIAL COLUMN LAYOUT

PROJECT : AYURVEDIC HOSP. & COLLEGEI

THESIS CO ORDINATOR : PROF. VICKY LALRAMSANGI

NAME : RITESH ANAND SONWANE

SCHOLAR NO. : 211110042

SEMESTER : 9TH

THESIS GUIDE : DR. ASHUTOSH SHARMA

STAGE

N

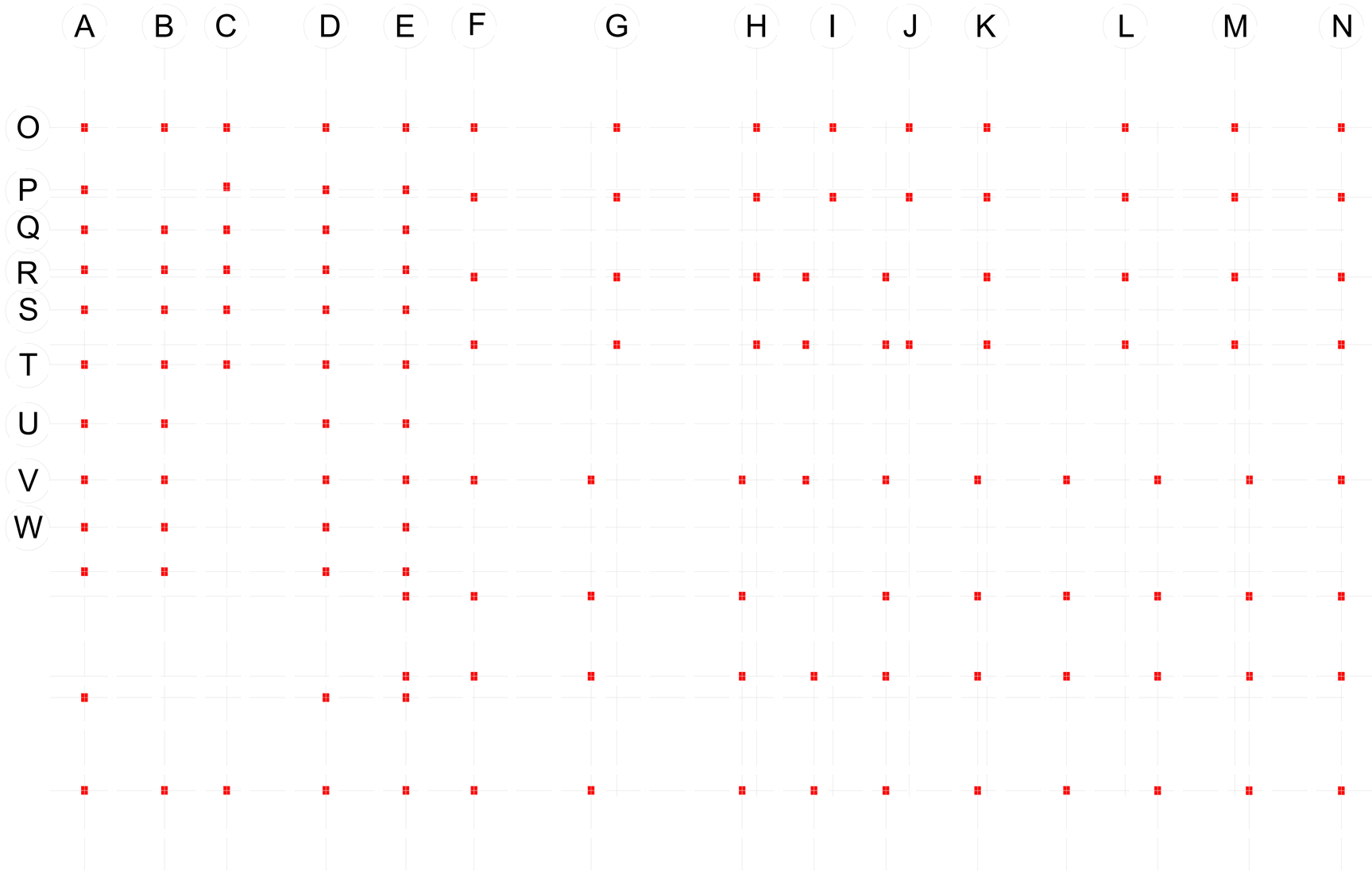

NOTES

SHEET : HOSPITIAL COLUMN LAYOUT

PROJECT : AYURVEDIC HOSP. & COLLEGEI

THESIS CO ORDINATOR : PROF. VICKY LALRAMSANGI

NAME : RITESH ANAND SONWANE

SCHOLAR NO. : 211110042

SEMESTER : 9TH

THESIS GUIDE : DR. ASHUTOSH SHARMA

STAGE

N

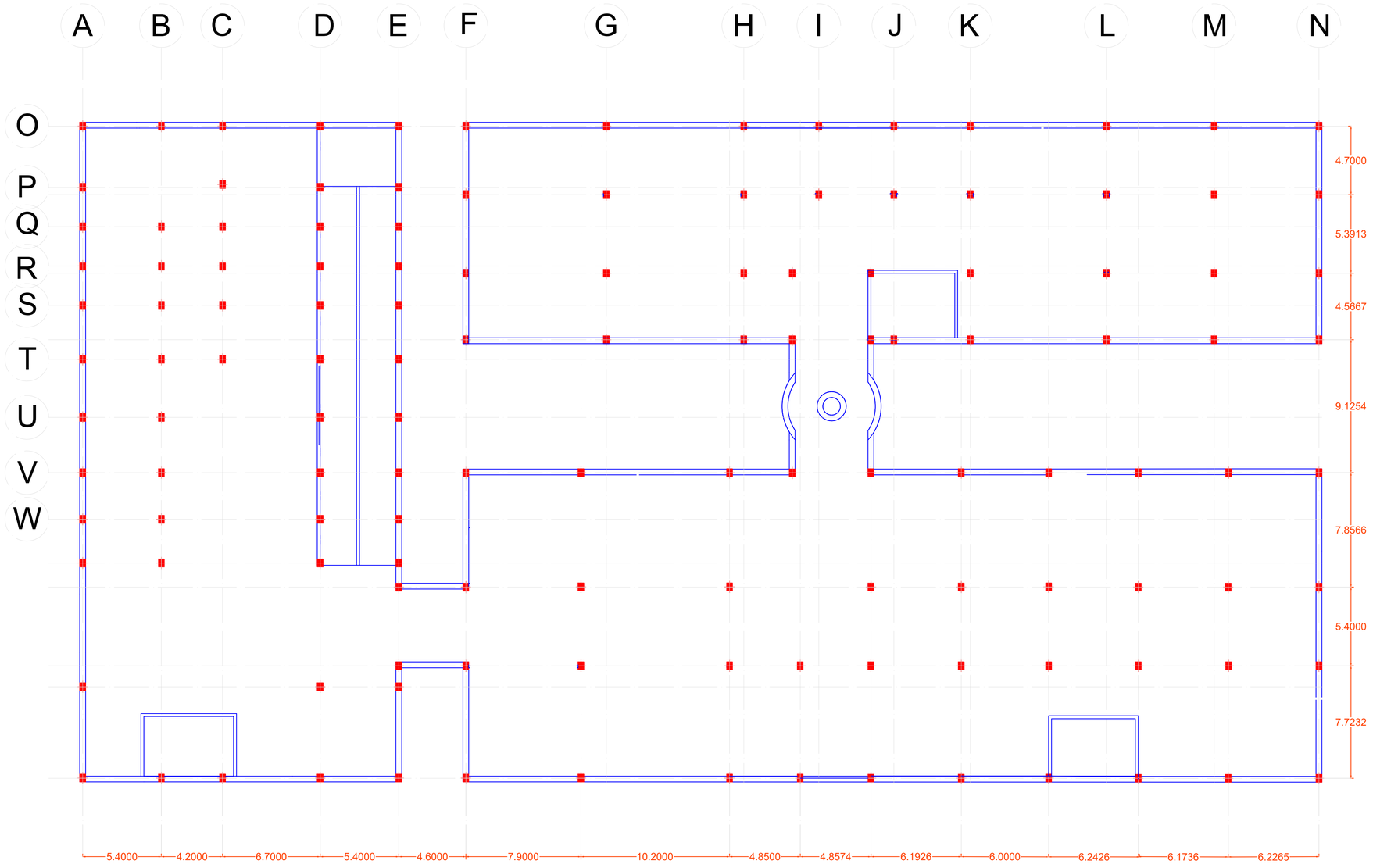

NOTES

SHEET : HOSPITIAL TERRACE PLAN

PROJECT : AYURVEDIC HOSP. & COLLEGEI

THESIS CO ORDINATOR : PROF. VICKY LALRAMSANGI

NAME : RITESH ANAND SONWANE

SCHOLAR NO. : 211110042

SEMESTER : 9TH

THESIS GUIDE : DR. ASHUTOSH SHARMA

STAGE

N

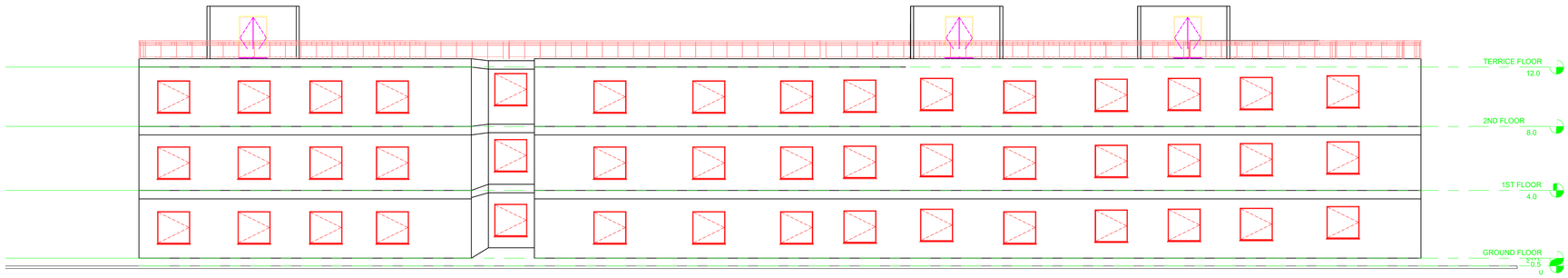

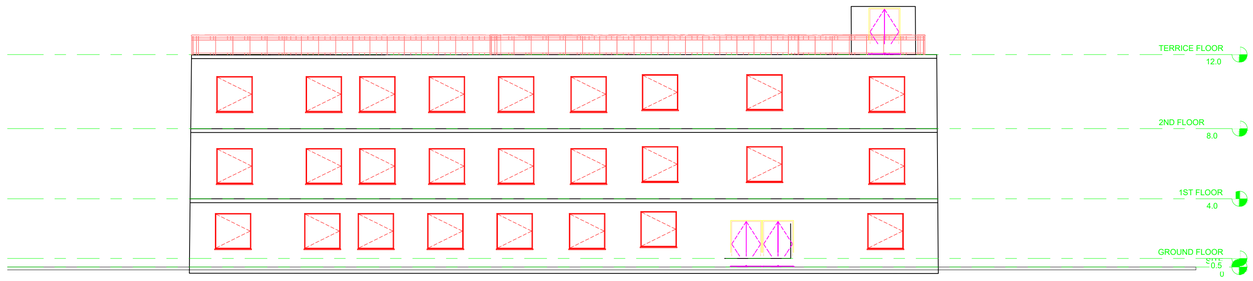

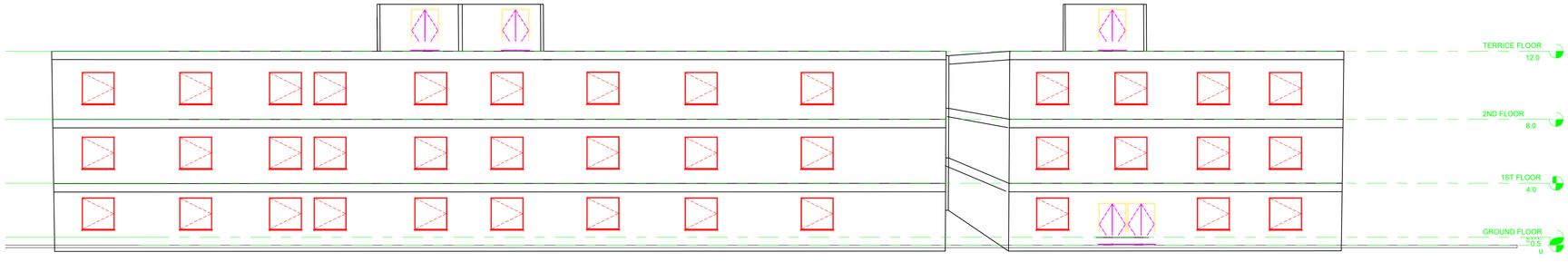

NOTES

SHEET : HOSPITIAL ELEVATION

PROJECT : AYURVEDIC HOSP. & COLLEGEI

THESIS CO ORDINATOR : PROF. VICKY LALRAMSANGI

NAME : RITESH ANAND SONWANE

SCHOLAR NO. : 211110042

SEMESTER : 9TH

THESIS GUIDE : DR. ASHUTOSH SHARMA

STAGE

N

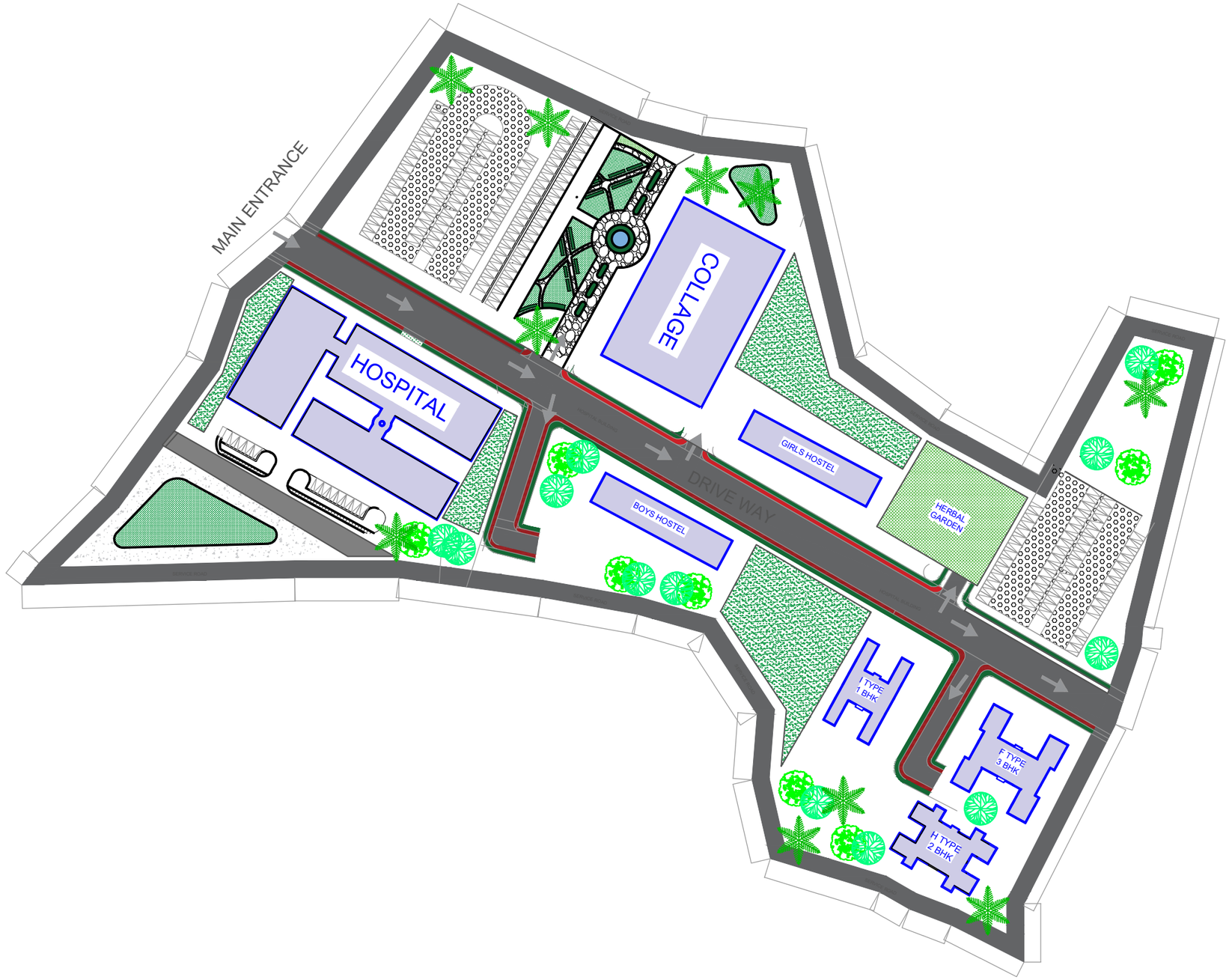

NOTES

SHEET : SITE PLAN

PROJECT : AYURVEDIC HOSP. & COLLEGEI

THESIS CO ORDINATOR : PROF. VICKY LALRAMSANGI

NAME : RITESH ANAND SONWANE

SCHOLAR NO. : 211110042

SEMESTER : 9TH

THESIS GUIDE : DR. ASHUTOSH SHARMA

STAGE

N